GREYSTONE
ENERGY SYSTEMS INC

WATER DETECTOR, CONDUCTIVITY CABLE



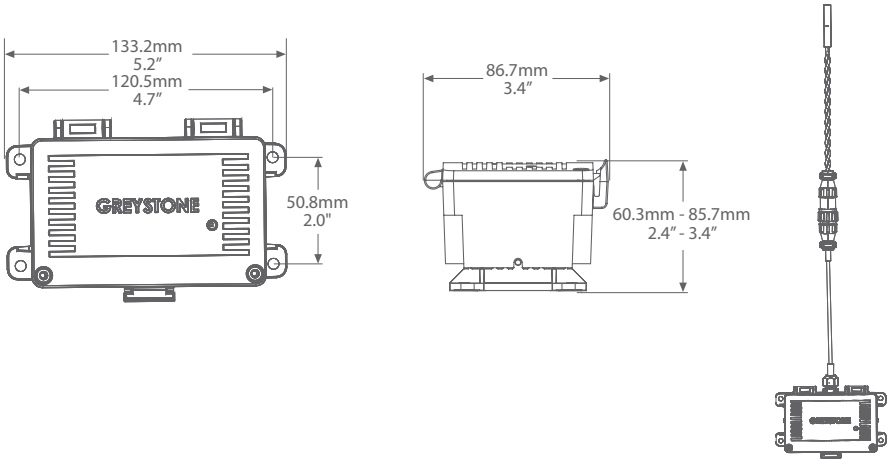

c UL us
LISTED

WLDC SERIES

PRODUCT DESCRIPTION

The conductivity cable water detector is used to detect the presence of water or conductive liquids. It is available with either one or two relay outputs and is designed to signal alarms if one or more of three conditions are met: water is detected, power is lost to the unit, or if there is an internal failure.

The conductivity cable water detector is housed in an IP65 rated enclosure with various lengths of cable available. An optional leader cable is also available in various lengths. It features height adjustable mounting legs that include 5 preset mounting heights. An LED provides visual status indication.

TYPICAL INSTALLATION

For complete installation and wiring details, please refer to the product installation instructions.

The water detector enclosure can be mounted directly to the floor of the area requiring monitoring or on a nearby wall.

If the device was ordered with a leader cable, the conductivity cable can be disconnected to assist in installation.

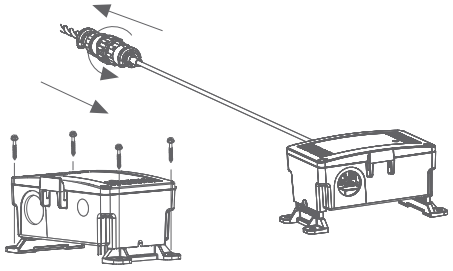

SPECIFICATIONS

VISUAL INDICATION	Tri-color LED - Green, Yellow, Red
OPERATING TEMPERATURE	0 to 60°C (32 to 140°F)
DIMENSIONS	133.2mm L x 86.7mm W x 60.3-85.7mm H (5.2" x 3.4" x 2.4"- 3.4")
OPTIONAL LEADER CABLE	FT-6 Plenum rated
PROTECTION CLASS	III
POWER SOURCE UL	12-27 Vac/Vdc, 50/60 Hz, SELV, Class 2
CONSUMPTION	125 mA max @ 24 Vac
OUTPUTS	2A , 30 Vac/Vdc, 6000 cycles, resistive, 60°C, SELV, Class 2 1 or 2 Form C relay alarms (NO/NC)
EU CONFORMITY	CE
UL MODEL#	WH2O11C, WH2O12C
CERTIFICATION	UL 60730 & CSA E60730
UL 2043 / CSA / ULC S142 COMPLIANT	Suitable for Use In Air Handling Spaces in Accordance with Section 300.22, (C) of the National Electrical Code
ENCLOSURE	Type 4X & IP65, ABS w/hinged & gasket cover
PURPOSE OF CONTROL	Operating Control, Water Detector
TYPE OF ACTION	Type 1. C Action
IMPULSE VOLTAGE	330V
POLLUTION DEGREE	3
COUNTRY OF ORIGIN	Canada

SPECIFICATIONS - SENSING CABLE

PLENUM RATING	CL2P (UL)
SHEER STRENGTH	>81.65kg (180 lbs.)
CUT THROUGH RESISTANCE.	>18.14kg (>40 lbs.) with 0.127mm (0.005") blade
ABRASION RESISTANCE	60 cycles per UL719
OPERATING ENVIRONMENT	Temperature: 0 to 75°C (32 to 167°F) Humidity: 5% to 95% RH, non-condensing Altitude: 4,572m (15,000') max
STORAGE ENVIROMENT	-30 to 85°C (-22 to 185°F)
CERTIFICATIONS	CE, UL CL2P, RoHS compliant, Plenum Rated

GREYSTONE
ENERGY SYSTEMS INC

APPLICATION

The following chart gives examples of what types of fluids the WLD can and cannot be used to detect.

FLUIDS THAT CAN BE DETECTED	FLUIDS THAT CAN'T BE DETECTED
City water	Pure water
Sea water	Gasoline
Copper sulfate solution	Oil
Weak acid	Brake fluid
Weak base	Alcohol
Household ammonia	Ethylene glycol
Water & glycol mixture	Parafin
Wet soil	Dry soil
Coffee	Whiskey

WIRING INFORMATION

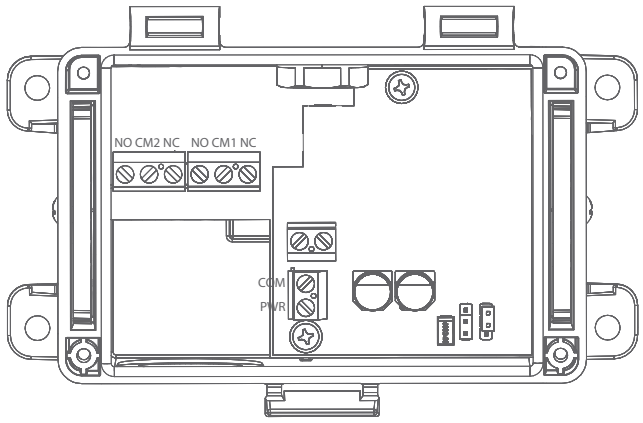

TERMINAL	FUNCTION
NO	Normally Open Contact
CM1	COMMON
NC	Normally Closed Contact
NO	Normally Open Contact
CM2	COMMON
NC	Normally Closed Contact
COM	COMMON
PWR	12-27 Vac/Vdc

*Terminals only present if option orderd

ORDERING

PRODUCT	**WLDC**	Water Detector with Conductivity Cable
RELAY	**1** **2**	1 Relay 2 Relay
LEADER CABLE LENGTH	**00** **02** **05** **10**	No Leader Cable 2m (6.5') 5m (16.4') 10m (32.8')
CONDUCTIVITY CABLE LENGTH	**C002** **C003** **C005** **C010** **C015** **C020** **C030** **C050**	2m (6.5') 3m (9.8') 5m (16.4') 10m (32.8') 15m (49.2') 20m (65.6') 30m (98.4') 50m (164')

PART NUMBER

WLDC

NOTE: Greystone Energy Systems, Inc. reserves the right to make design modifications without prior notice.

RoHS COMPLIANT

Greystone Energy Systems, Inc.
150 English Drive, Moncton,
New Brunswick, Canada E1E 4G7

Ph: +1 (506) 853-3057 Fax: +1 (506) 853-6014
North America: 1-800-561-5611
E-mail: mail@greystoneenergy.com

Copyright © Greystone Energy Systems Inc. All Rights Reserved