GREYSTONE
ENERGY SYSTEMS INC

WATER DETECTOR, DUAL CHANNEL, CONDUCTIVITY CABLE



c UL us
LISTED

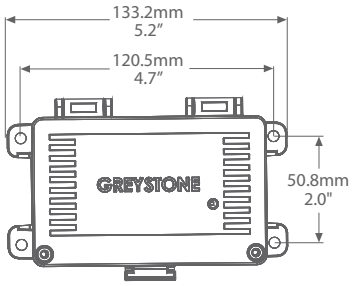

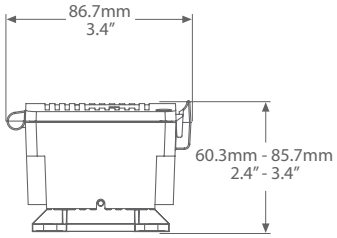

WLD2C SERIES

PRODUCT DESCRIPTION

The dual channel conductivity cable water detector is used to detect the presence of water or conductive liquids. It features two sensing cables, each with an independent relay output and is designed to signal alarms if one or more of three conditions are met: water is detected, power is lost to the unit, or if there is an internal failure.

The dual channel water detector features two independent conductivity cables that are available in several lengths. An optional leader cable is also available in several lengths.

It is housed in an IP65 rated enclosure with height adjustable mounting legs. A tri-color LED provides visual status indication.

TYPICAL INSTALLATION

For complete installation and wiring details, please refer to the product installation instructions.

The water detector enclosure can be mounted directly to the floor of the area requiring monitoring or on a nearby wall.

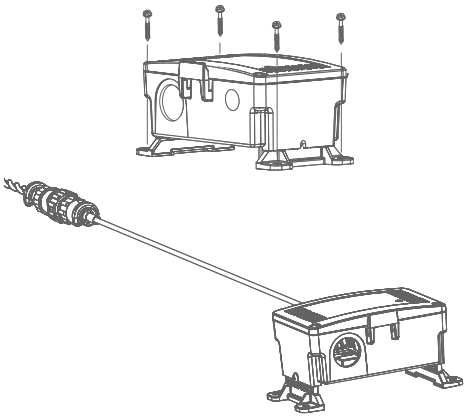

SPECIFICATIONS

VISUAL INDICATION	Tri-color LED - Green, Yellow, Red
OPERATING TEMPERATURE	0 to 60°C (32 to 140°F)
DIMENSIONS	133.2mm L x 86.7mm W x 60.3-85.7mm H (5.2" x 3.4" x 2.4"- 3.4")
OPTIONAL LEADER CABLE	FT-6 Plenum rated
PROTECTION CLASS	III
POWER SOURCE UL	12-27 Vac/Vdc, 50/60 Hz, SELV, Class 2
CONSUMPTION	125 mA max @ 24 Vac
OUTPUTS	2A , 30 Vac/Vdc, 6000 cycles, resistive, 60°C, SELV, Class 2 1 or 2 Form C relay alarms (NO/NC)
EU CONFORMITY	CE
UL MODEL#	WH2O22CC
CERTIFICATION	UL 60730 & CSA E60730
UL 2043 / CSA / ULC S142 COMPLIANT	Suitable for Use In Air Handling Spaces in Accordance with Section 300.22, (C) of the National Electrical Code
ENCLOSURE	Type 4X & IP65, ABS w/hinged & gasket cover
PURPOSE OF CONTROL	Operating Control, Water Detector
TYPE OF ACTION	Type 1. C Action
IMPULSE VOLTAGE	330V
POLLUTION DEGREE	3
COUNTRY OF ORIGIN	Canada

SPECIFICATIONS - SENSING CABLE

PLENUM RATING	CL2P (UL)
SHEER STRENGTH	>81.65kg (180 lbs.)
CUT THROUGH RESISTANCE.	>18.14kg (>40 lbs.) with 0.127mm (0.005") blade
ABRASION RESISTANCE	60 cycles per UL719
OPERATING ENVIRONMENT	Temperature: 0 to 75°C (32 to 167°F) Humidity: 5% to 95% RH, non-condensing Altitude: 4,572m (15,000') max
STORAGE ENVIROMENT	-30 to 85°C (-22 to 185°F)
CERTIFICATIONS	CE, UL CL2P, RoHS compliant, Plenum Rated

GREYSTONE
ENERGY SYSTEMS INC

APPLICATION

The following chart gives examples of what types of fluids the WLD can and cannot be used to detect.

FLUIDS THAT CAN BE DETECTED	FLUIDS THAT CAN'T BE DETECTED
City water	Pure water
Sea water	Gasoline
Copper sulfate solution	Oil
Weak acid	Brake fluid
Weak base	Alcohol
Household ammonia	Ethylene glycol
Water & glycol mixture	Parafin
Wet soil	Dry soil
Coffee	Whiskey

WIRING INFORMATION

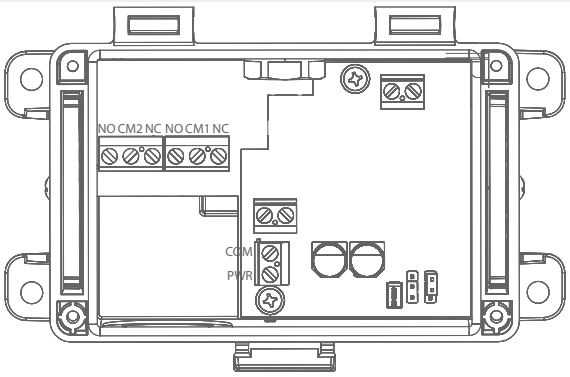

TERMINAL	FUNCTION
NO	Normally Open Contact
CM1	COMMON
NC	Normally Closed Contact
NO	Normally Open Contact
CM2	COMMON
NC	Normally Closed Contact
COM	COMMON
PWR	+24 VAC/DC

ORDERING

PRODUCT	WLD2C	Water Detector, 2 Channel, Conductivity Cable
LEADER CABLE, CHANNEL 1	**00** **02** **05** **10**	No Leader Cable 2m (6.5') 5m (16.4') 10m (32.8')
CONDUCTIVITY CABLE, CHANNEL 1	**C002** **C003** **C005** **C010** **C015** **C020** **C050**	2m (6.5') 3m (9.8') 5m (16.4') 10m (32.8') 15m (49.2') 20m (65.6) 50m (164')
LEADER CABLE, CHANNEL 2	**L00** **L02** **L05** **L10**	No Leader Cable 2m (6.5') 5m (16.4') 10m (32.8')
CONDUCTIVITY CABLE, CHANNEL 2	**C002** **C003** **C005** **C010** **C015** **C020** **C050**	2m (6.5') 3m (9.8') 5m (16.4') 10m (32.8') 15m (49.2') 20m (65.6) 50m (164')

PART NUMBER

WLD2C

NOTE: Greystone Energy Systems, Inc. reserves the right to make design modifications without prior notice.

RoHS COMPLIANT

Greystone Energy Systems, Inc.
150 English Drive, Moncton,
New Brunswick, Canada E1E 4G7

Ph: +1 (506) 853-3057 Fax: +1 (506) 853-6014
North America: 1-800-561-5611
E-mail: mail@greystoneenergy.com

Copyright © Greystone Energy Systems Inc. All Rights Reserved