GREYSTONE
ENERGY SYSTEMS INC

ROOM PRESSURE MONITOR



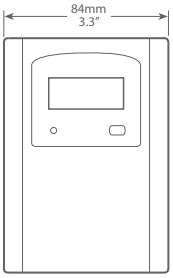

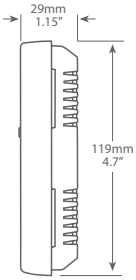

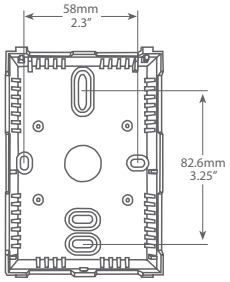

RPC SERIES

PRODUCT DESCRIPTION

The RPC Series room pressure monitor/transmitter is used to measure differential pressure in the range of 0.125 to 1"WC or 30 to 250 Pa and provide either an analog or BACnet® compatible signal to a building automation system.

It combines precision high sensitivity silicon sensing capabilities and the latest ASIC technology to substantially reduce offset errors due to changes in temperature, stability to warm up, long term instability and position sensitivity.

It features an LCD to display the pressure value, several bi-directional pressure ranges and field-selectable output signal types for the most flexible application. The device has an on-board auto-zero function. It features an alarm output with an adjustable trip point for high and low alarm levels, an on-board buzzer, a remote buzzer output with silence switch and a flashing alarm LED.

TYPICAL INSTALLATION

For complete installation and wiring details, please refer to the product installation instructions.

The RPC series can be mounted directly to a single gang electrical box or directly to a wall. If the remote buzzer option is used, simply mount it directly a standard electrical box.

A terminal block connection is provided for connection to the Building Automation System. There are several wiring configurations depending on the options selected.

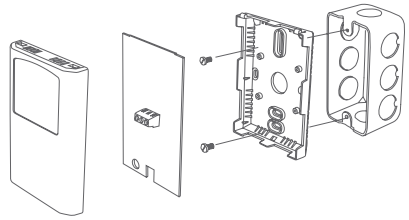

SPECIFICATIONS

PRESSURE RANGES	±1", ±0.5", ±0.25", ±0.125"WC ±250, ±125, ±60, ±30 Pa
ACCURACY	±1% F.S.O. (±2% F.S.O. for 0.125"WC and 30 Pa ranges)
STABILITY	±1% FS max (1 year)
THERMAL EFFECTS	<±3.5% FS max, 5 to 50°C (41 to 122°F)
RESPONSE TIME	0 to 60 seconds (menu selectable)
PROOF PRESSURE	100"WC (24.9 kPa)
BURST PRESSURE	200"WC (49.8 kPa)
OPERATING CONDITIONS	0 to 60°C (32 to 140°F), 10 to 90 %RH non-condensing
STORAGE TEMPERATURE	-40 to 70°C (-40 to 158°F)
MEDIA COMPATIBILITY	Dry air and inert gas
ZERO ADJUSTMENT	Pushbutton auto-zero
POWER SUPPLY	24 Vac/dc, ±10%
POWER CONSUMPTION	70 mA max with alarms on (80 mA with BACnet® option)
OUTPUT SIGNAL	4-20 mA (3 wire), 0-5 Vdc or 0-10 Vdc (3 wire), field selectable
OUTPUT DRIVE	**Current:** 750Ω max **Voltage:** 2000Ω min
INPUT VOLTAGE EFFECT	Negligible over specified operating range
PROTECTION CIRCUITRY	Reverse voltage protected and output limited
WIRING CONNECTIONS	Screw terminal block (14 to 22 AWG)
PRESSURE CONNECTIONS	Ports for 1/16" ID tubing (1/8" ID Adapters included)
ENCLOSURE	White ABS, IP30 (NEMA 1)
DIMENSIONS	84mm W x 119mm H x 29mm D (3.3" x 4.7" x 1.15")
WEIGHT	115g (4 oz)
COUNTRY OF ORIGIN	Canada
LCD DISPLAY	**Size:** 38.1mm W x 16.5mm H (1.5" x 0.65") **Digit Height:** 11.43mm (0.45") **Symbols:** "WC, Pa **Backlight:** Enable/disable via menu
ALARM FUNCTION	**Relay Output:** N.O. contact, 2 Amps @ 120 Vac or 30 Vdc **Relay Trip Point:** Upper and lower trip levels adjustable over the pressure range **Relay Delay:** 0 to 10 minutes (menu selectable) **Audible Indication:** On-board buzzer, 85 db on high range (menu selectable) **Buzzer Output:** Output to control remote audible alarm (Part Number AA-1) **Visual Indication:** Setpoint step size for each range... ±1"WC (0.05), ±0.5"WC (0.02), ±0.25"WC (0.01), ±0.125"WC (0.01) ±250Pa (10), ±125Pa (5), ±60 Pa (2), ±30Pa (1)
OPTIONAL BACnet® COMMUNICATIONS	**Communications:** 2 wires RS-485, BACnet® MS/TP protocol **Baud Rate:** Locally set to 9600, 19200, 38400, or 76800 **MAC Address Range:** Locally set to 0-127 (factory default is 3)

GREYSTONE
ENERGY SYSTEMS INC

WIRING INFORMATION

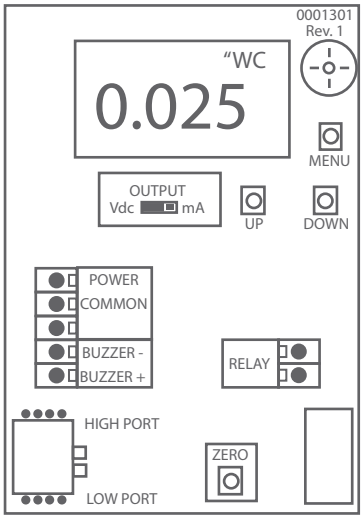

ANALOG MODEL

TERMINAL	FUNCTION
PWR	24 Vac/Vdc
COM	Common
OUT	Analog Output
RELAY	Digital Output
RELAY	Digital Output

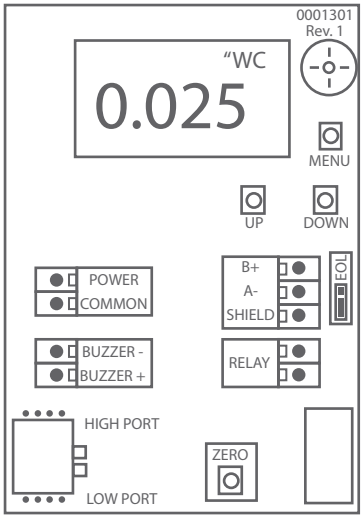

BACnet® MODEL

TERMINAL	FUNCTION
PWR	24 Vac/Vdc
COM	Common
B +	B +
A -	A -
SHIELD	Shield
RELAY	Digital Output
RELAY	Digital Output

ORDERING

PRODUCT	**RPC**	Room Pressure Monitor/Transmitter
PRESSURE RANGES	**1** **2**	±1"WC, ±0.5"WC, ±250 Pa, ±125 Pa ±0.25"WC, ±0.125"WC, ±60 Pa, ±30 Pa
COMMUNICATIONS	**-** **BAC**	None (Leave Blank) BACnet® Communications
OPTIONS	**AC** **SP** **OP**	Continental pick-up port Stainless plate pick-up port Outside pick-up port

PART NUMBER

RPC

NOTE: Greystone Energy Systems, Inc. reserves the right to make design modifications without prior notice.

RoHS COMPLIANT

Greystone Energy Systems, Inc.
150 English Drive, Moncton,
New Brunswick, Canada E1E 4G7

Ph: +1 (506) 853-3057 Fax: +1 (506) 853-6014
North America: 1-800-561-5611
E-mail: mail@greystoneenergy.com

Copyright © Greystone Energy Systems Inc. All Rights Reserved