GREYSTONE ENERGY SYSTEMS INC

TECHNICAL DATA SHEET **QVRF Series**



A2L REFRIGERANT SENSOR/TRANSMITTER

The QVRF gas detectors are a next-generation solution designed specifically for A2L refrigerants and compliant with ASHRAE Standard 15, which limits refrigerant charges to prevent major hazards. These detectors support Variable Refrigerant Flow (VRF) systems, which optimize energy efficiency by adjusting refrigerant flow across different zones. They also meet IEC 60335-2-40 standards, making them suitable for appliances like heat pumps, air conditioners, and fan coil units that use motor compressors.

Utilizing infrared technology, the QVRF detectors offer precise refrigerant detection without cross-sensitivity or false alarms. Their non-contact sensing method ensures long-term reliability, with a sensor lifespan exceeding twelve years under normal conditions. Each unit features a digital multicolor LED status indicator, two configurable relays, and can be installed in a standard two-gang electrical box (IP54 rated) or directly within an appliance.

Connectivity is streamlined through RS-485 digital communication, allowing integration with the Q-Controller, M-Controller2, or Q4C-II Controller. Modbus and BACnet outputs will be available by Spring 2026. Controllers can also be equipped with horns and strobes to warn personnel before entering hazardous areas.

- **12 years life expectancy** in normal commercial environments
- **Non-dispersive infrared (NDIR)**, immunity to poisoning
- **Maintenance free**
- **2 SPDT Relay outputs**
- **RS-485 protocol:** OptoMux or Modbus RTU (BACnet Spring 2026)
- **Multicolour LED** Status Indicator
- **Easy installation** to a two-gang electrical box
- **IP Rate:** IP54 with splash guard .
- **Buzzer**

SPECIFICATIONS

POWER SUPPLY	24Vac (15-24Vac); 24Vdc (18-30Vdc) *Note 1
FUSE	0.750A Polyswitch
SUPPLY CURRENT | POWER CONSUMPTION	Max 0.4A (normal working mode)
SENSING ELEMENT TECHNOLOGY	Non-Dispersive infrared (NDIR)
SENSOR LIFE	Approx ~12 years
ACCURACY /REPEATABILITY	+/- 2.5% LFL at 0 – 25% LFL standard measurement range +/- 5.0% LFL at 25 – 50% LFL extended measurement range
SHELF LIFE	Unlimited
RESPONSE TIME	30 seconds
COVERAGE AREA	700m^2 (7500ft^2) or 15m (50ft) radius
MOUNTING HEIGHT	0.3m (1ft) above the floor
FACTORY CALIBRATION RANGE	0-50% LFL
LED INDICATOR	**Green blinking:** Normal status with communication **Yellow flash:** Sensor Fault **Red flash:** Alarm and purge
WARM-UP	30 minutes
RELAYS OUTPUTS	2 Relays SPDT (Form C) Dry Contact *Note 2 1.0A Maximum at 30 VDC (resistive load) 0.3A maximum at 125 VAC (resistive load)
RELAYS LIFE EXPECTANCY	Mechanical @ 50 million & Electrical @ 200,000 operations

Copyright © Greystone Energy Systems Inc. All Rights Reserved
Greystone Energy Systems, Inc.
321 Desbrisay Avenue, Moncton,
New Brunswick, Canada E1E 0J2

Ph: +1 (506) 853-3057 Fax: +1(506) 853-6014
North America: 1-800-561-5611
E-mail: mail@greystoneenergy.com

SPECIFICATIONS

DIGITAL OUTPUT	RS-485 with OptoMux protocol Connects to Q4C-II Controller, M-Controller2 and Q-Controller RS-485 with Modbus RTU Protocol Default: Address 3 ,OptoMux, Baud rate : 4800 bps
BUZZER	50db at 10cm, 2700Hz buzzer *Note 3
LOCATION	Indoor use only
OPERATING TEMPERATURE	-40° to 70°C (-40° to 158°F)
STORAGE TEMPERATURE	-45° to 85°C (-49° to 185°F)
AMBIENT HUMIDITY	5% to 95% RH (non-condensing)
OPERATING PRESSURE	Atmospheric
ENCLOSURE	IP54 ratings with splash guard
WIRING	TSP for Power, Belden 984 for RS-485
DIMENSIONS	116 x 116 x 40mm (4.6 x 4.6 x 1.6")
WEIGHT	Less than 0.23kg (0.5lbs)

Note 1: *QVRF has a half-wave rectifier circuit on board. You will damage devices if you mix half wave and full wave rectifiers on the same AC source. Use extreme caution when sharing a common AC source. Sharing a common DC source is less problematic.*

Note 2: *Relay 1 is switched ON when concentration > 20% LFL*
Relay 1 is switched OFF when concentration < 15% LFL
Relay 2 is switched ON when any fault happens

Note 3: *When Relay1 is ON, the Buzzer is ON.*

ACCESSORIES

Q-CONTROLLER	Communication central unit, RS-485 port, Modbus protocol, BACnet/IP, 4Relay, 128 Analog outputs
M-CONTROLLER2	Communication central unit, RS-485 port, Modbus protocol, 3 Relay, 8 Analog outputs
Q4C- CONTROLLER	Communication central unit, RS-485 port, Modbus Protocol, BACnet /IP, 4 Relays
85930-007-000	Unit cover for wet application

DIMENSIONS

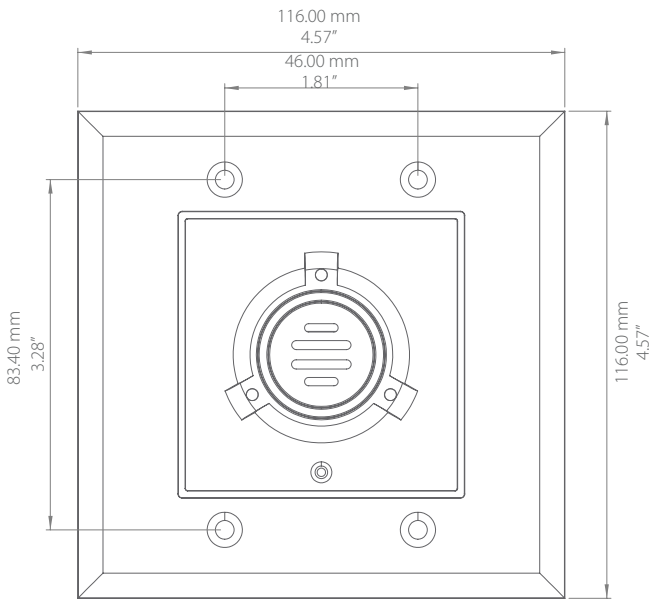

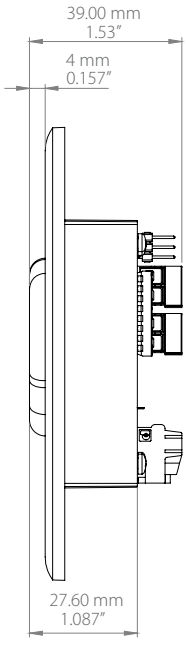

Copyright © Greystone Energy Systems Inc. All Rights Reserved

WIRING INFORMATION

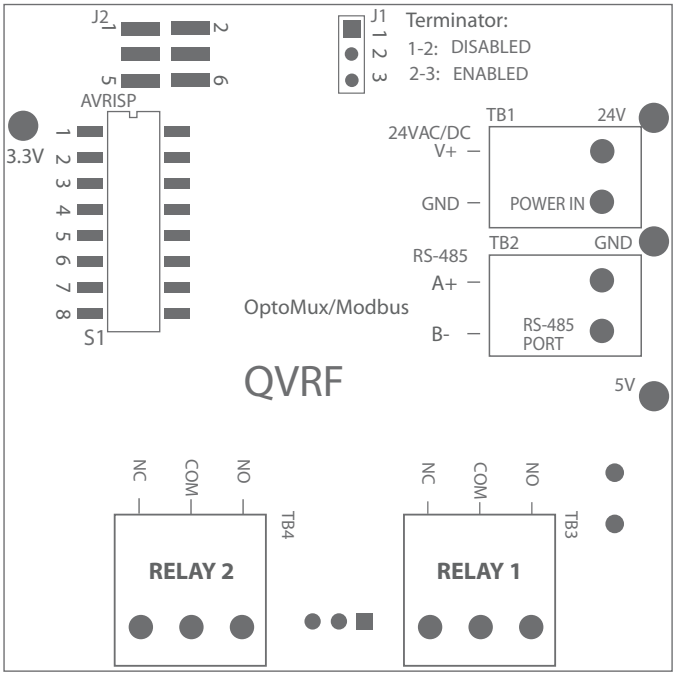

QVRF

TERMINAL		FUNCTION
TB1	24VAC 24VDC	Power IN
TB2	A+ B-	RS-485 For Controller
TB3 RELAY 1 TB4 RELAY 2	**NC:** Normally Close **COM:** Common **NO:** Normally Open	2 x Relay Outputs
S1	**SW-1 to SW-5:** Address configuration **SW-6:** Protocol selection **SW-7:** Baud rate selection	Dip Switch (See Operation Manual for details)

ORDERING CODE

GAS TYPE	SPAN RANGE	PRODUCT
R32	0-50% LFL	QVRF-0R32-G
R454A	0-50% LFL	QVRF-454A-G
R454B	0-50% LFL	QVRF-454B-G
R454C	0-50% LFL	QVRF-454C-G

Copyright © Greystone Energy Systems Inc. All Rights Reserved
Greystone Energy Systems, Inc.
321 Desbrisay Avenue, Moncton,
New Brunswick, Canada E1E 0J2
Ph: +1 (506) 853-3057 Fax: +1(506) 853-6014
North America: 1-800-561-5611
E-mail: mail@greystoneenergy.com