GREYSTONE ENERGY SYSTEMS INC

TECHNICAL DATA SHEET **HTX3 Series**



c UL us LISTED

HIGH ACCURACY HUMIDITY/TEMPERATURE TRANSMITTER

The HTX3 High-Accuracy Humidity and Temperature Transmitter is used in environmental monitoring and control systems that require high accuracy and stability. The state-of-the-art design combines digital linearization and temperature compensation. A highly accurate and reliable Thermoset polymer-based capacitance sensor chip and a Class A resistance temperature detector (RTD) provides reliability and accuracy in the most critical applications.

The HTX3 Series Transmitters has two measurement variables for relative humidity (RH) and dry-bulb temperature. Both variables are available as analog signals (2X) to provide the most efficient monitoring and control solution. A weatherproof polycarbonate enclosure protects the electronics. The hinged and gasketed cover provides ease of installation.

An optional NIST traceable calibration certificate is available.

SPECIFICATIONS

HUMIDITY SENSOR TYPE	Thermoset polymer-based capacitance sensor chip
HUMIDITY ACCURACY	±1% RH, 20% to 70% RH @ 25°C Typical ±1.5% RH, 0% to 20% RH and 70 % to 90% RH @ 25°C Typical
HUMIDITY MEASUREMENT RANGE	0% RH to 100% RH
TEMPERATURE SENSOR TYPE	1K ohm platinum, IEC751, 385 Alpha, thin film, Class A
TEMPERATURE SENSOR ACCURACY	±0.15°C (±0.27°F) @ 0°C (32°F)
TEMPERATURE MEASUREMENT RANGE	-40°C to 60°C (-40°F to 140°F) or 0°C to 60°C (32°F to 140°F)
HYSTERESIS	±0.8 %RH maximum
REPEATABILITY	±0.5 %RH
SENSOR RESPONSE TIME	8 s
OUTPUT SIGNALS (2X)	4 to 20 mA, loop-powered 0 to 5 Vdc or 0 to 10 Vdc
POWER SOURCE UL	24 Vac/dc ±10% typical, SELV (Class 2)
CONSUMPTION	22 mA @ 24 Vdc, 70 mA @ 24 Vac
OUTPUT DRIVE AT 24 VDC	Current: 550 Ω Max Voltage: 10,000Ω Min
INPUT VOLTAGE EFFECT	Negligible over specified operating range
PROTECTION CIRCUITRY	Reverse voltage protected and output limited
OPERATING CONDITIONS	-40°C to 60°C (-40°F to 140°F), 0% RH to 95% RH, noncondensing
STORAGE CONDITIONS	-40°C to 70°C (-40°F to 158°F), 0% RH to 95% RH, noncondensing
INTERNAL ADJUSTMENTS	Temperature ZERO and SPAN pots Humidity Offset pot -10% to +10%
PROTECTION CLASS	III
CONFORMITY	CE, UKCA
CERTIFICATION	UL60730 & CSA E60730
PURPOSE OF CONTROL	Operating Control
TYPE OF ACTION	Type 1
IMPULSE VOLTAGE	330V
POLLUTION DEGREE	2
WIRING CONNECTIONS	Screw terminal block, 14 AWG to 22 AWG
WIRING ACCESS	Rear: 0.895" hole for conduit connection Side : M16 x 1.5 Cable gland
ENCLOSURE DIMENSIONS	116.5 mm H x 113.1 mm W x 54.0 mm D (4.59 in. x 4.45 in. x 2.13 in.)
ENCLOSURE MATERIAL	Grey polycarbonate with gasket, UL94-V0
ENCLOSURE RATING	IP65 (NEMA 4X)
PROBE, L X D	304 S/S, 104.8 mm x 12.7 mm (4.1 in. x 0.5 in.)
FILTER	20 Micron porous PTFE filter
WEIGHT	7.8 oz (220g), including probe
OPTIONAL CALIBRATION CERTIFICATE	NIST traceable 1-Point or 3-Point
COUNTRY OF ORIGIN	Canada

RoHS COMPLIANT

c UL us LISTED

Greystone Energy Systems, Inc.
321 Desbrisay Avenue, Moncton,
New Brunswick, Canada E1E 0J2

Ph: +1 (506) 853-3057 Fax: +1(506) 853-6014
North America: 1-800-561-5611
E-mail: mail@greystoneenergy.com

PRINTED IN CANADA
Copyright © Greystone Energy Systems Inc. All Rights Reserved

WIRING INFORMATION

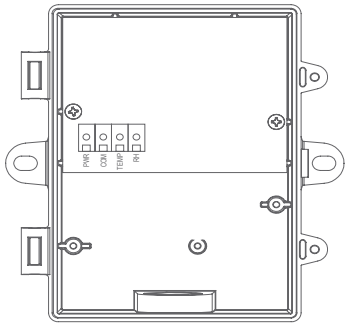

TERMINAL	FUNCTION
PWR	24 Vac/dc of controller or power supply
COM	To GND or COMMON of controller
TEMP	Analog Output
RH	Analog Output

ORDERING CODE

SERIES	APPLICATION		ENCLOSURE			OUTPUT		TEMP RANGE			NIST CALIBRATION CERTIFICATE	
HTX3					1					SP		
	W	Wall Mount	**B**	Rear Cable Entry Hole for EMT 22.7 mm D (0.895")		**A**	4-20 mA	**08G**	-40°C to 60°C (-40°F to 140°F)			None (Leave Blank)
			F	Side Cable Gland		**D**	0-5 Vdc	**09S**	0°C to 60°C (32°F to 140°F)		**1N**	1-Point RH/T
						E	0-10 Vdc				**3N**	3-Point RH/T

DIMENSIONS

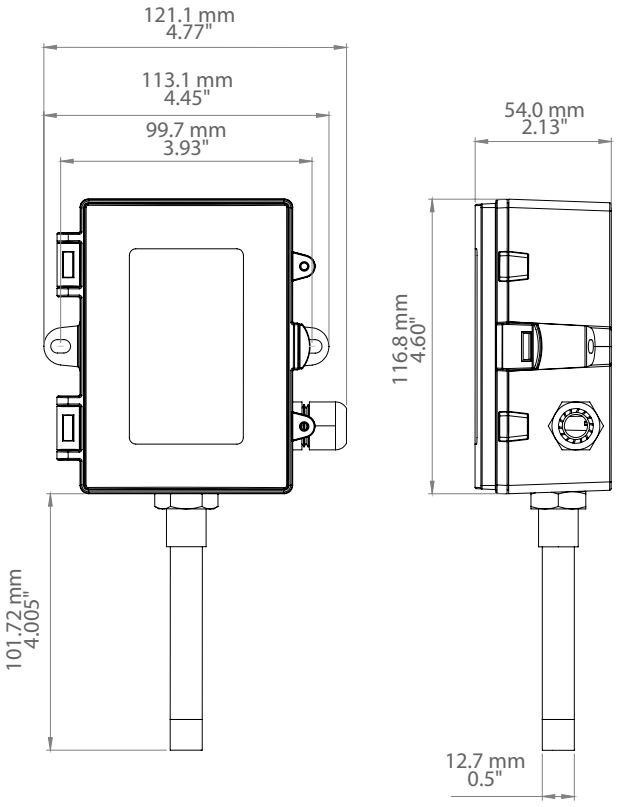

Copyright © Greystone Energy Systems Inc. All Rights Reserved

Greystone Energy Systems, Inc.
321 Desbrisay Avenue, Moncton,
New Brunswick, Canada E1E 0J2

Ph: +1 (506) 853-3057 Fax: +1(506) 853-6014
North America: 1-800-561-5611
E-mail: mail@greystoneenergy.com