GREYSTONE ENERGY SYSTEMS INC

TECHNICAL DATA SHEET **HTX2 Series**

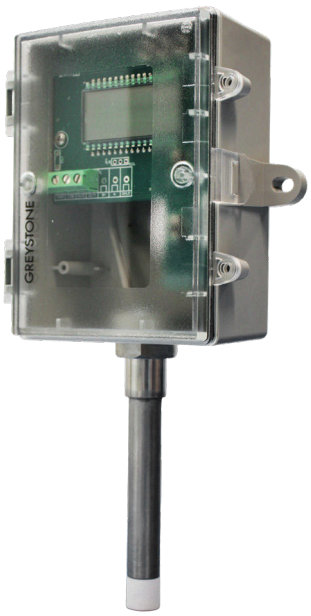

c UL us LISTED

HIGH ACCURACY HUMIDITY/TEMPERATURE TRANSMITTER

The HTX2 High-Accuracy Humidity and Temperature Transmitter is used in environmental monitoring and control systems that require high accuracy and stability. The state-of-the-art design combines digital linearization and temperature compensation. A highly accurate and Thermoset Polymer-based Sensor Chip humidity sensor and a Bipolar Transistor Sensor Chip temperature sensor provides reliability and accuracy in the most critical applications.

The HTX2 Series Transmitters default measurement variables are relative humidity (RH) and dry-bulb temperature. Additional variables of Dewpoint, Enthalpy and Wet Bulb Temperature can be field selected. The selected variables are available as analog signals (2X), via BACnet® or Modbus to provide the most efficient monitoring and control solution. A polycarbonate enclosure protects the electronics. The hinged and gasketed cover provides ease of installation.

An optional NIST traceable calibration certificate is available.

SPECIFICATIONS

HUMIDITY SENSOR TYPE	Thermoset polymer-based capacitance sensor chip
TEMPERATURE SENSOR TYPE	Bipolar Transistor Sensor Chip
MEASUREMENT RANGE	**Relative Humidity:** 0 to 100 %RH **Dry Bulb Temperature:** -30 to 50°C (-22 to 122°F)
CALCULATED VALUES	**Dewpoint Temperature:** -30 to 50°C (-22 to 122°F) **Wet Bulb Temperature:** -30 to 50°C (-22 to 122°F) **Enthalpy:** 0 to 340 kJ/kg (0 to 146 BTU/lb)
ACCURACY	**Relative Humidity:** ±1% RH, 20% to 70% RH @ 25°C Typical ±1.5% RH, 0% to 20% RH and 70 % to 90% RH @ 25°C Typical **Dry Bulb Temperature (T):** ±0.1°C (±0.2°F) @ –40 to +125°C (-40 to 257°F) **Dewpoint Temperature (Td):** ±1.0°C (±1.8°F) @ 40 %RH / 25°C **Wet Bulb Temperature (Tw):** ±1.0°C (±1.8°F) @ 50 %RH / 25°C **Enthalpy:** ±2 kJ/kg (±1 BTU/lb) @ 50 %RH / 25°C
CALIBRATION	**Humidity:** -10 to 10%RH Offset, Resolution = 1% RH **Temperature:** -5°C to 5°C (-10°F to 10°F) Offset, Resolution = 0.1°C/F
OUTPUT SIGNALS	**Analog Signals (2X):** 4 to 20 mA, 0 to 5 vdc, or 0 to 10 Vdc (field selectable) **Network Communication:** BACnet® or Modbus
IMPEDANCE @ 24 VDC:	**Current:** 500Ω max **Voltage:** 10,0000Ω minimum
OUTPUT PARAMETERS (FIELD SELECTABLE)	**Relative Humidity:** Rh Range: 0 to 100% **Dry Bulb Temperature:** Td Range 1: -30 to 50°C (-22 to 122°F) Td Range 3: 0 to 50°C (32 to 122°F) **Dewpoint Temperature:** T Range 1: -30 to 50°C (-22 to 122°F) Td Range 2: -20 to 40°C (-4 to 104°F) T Range 2: 0 to 50°C (32 to 122°F) **Wet Bulb Temperature:** Tw Range 1: -20 to 50°C (-4 to 122°F) Tw Range 2: 0 to 50°C (32 to 122°F) **Enthalpy:** En Range 1: 0 to 340 kJ/kg (0 to 146 BTU/lb) En Range 2: 0 to 250 kJ/kg (0 to 107 BTU/lb)
LCD DISPLAY VALUES	**Relative Humidity:** 0 to 100% RH (1% Resolution) **Dry Bulb Temperature:** -30.0 to 60.0°C (0.1°C resolution) or -22 to 140°F (0.1°F resolution) **Dewpoint Temperature:** -30.0 to 60.0°C (0.1°C resolution) or -22 to 140°F Td (0.1°F resolution) **Wet Bulb Temperature:** -20.0 to 60.0°C Tw (0.1°C resolution) or -4 to 140°F Tw (0.1°F resolution) **Enthalpy:** 0 to 340 kJ/kg (1 kJ/kg resolution or 0 to 146 BTU/lb (1BTU/lb resolution)
BACNET® PROTOCOL	MS/TP, 2-wire RS-485 Baud rate - 9600, 19200, 38400, 57600, or 115200 0-127 slave address range
MODBUS PROTOCOL	RTU, 2-wire RS-485 Baud rate - 300, 600, 1200, 2400, 4800, 9600, 19200, or 38400 1-255 slave address range
POWER SUPPLY	20 to 27 Vdc, 16 to 27 Vac (non-isolated half-wave rectified), SELV (Class 2)
CONSUMPTION @ 24 VAC	**Current:** 50 mA max @ 24 Vdc, 1.5 VA max **Voltage:** 30 mA max @ 24 Vdc, 1 VA @ 24 Vac
OPERATING CONDITIONS	-30 to 60°C (-22 to 140°F), 0 to 95 %RH non-condensing
STORAGE CONDITIONS	-40 to 70°C (-40 to 158°F), 0 to 95 %RH non-condensing
PROTECTION CLASS	III
CONFORMITY	CE, UKCA

RoHS COMPLIANT

c UL us LISTED

Greystone Energy Systems, Inc.
321 Desbrisay Avenue, Moncton,
New Brunswick, Canada E1E 0J2

Ph: +1 (506) 853-3057 Fax: +1(506) 853-6014
North America: 1-800-561-5611
E-mail: mail@greystoneenergy.com

PRINTED IN CANADA
Copyright © Greystone Energy Systems Inc. All Rights Reserved

DESCRIPTION	
CERTIFICATION	UL 60730 & CSA E60730
PURPOSE OF CONTROL	Operating Control
TYPE OF ACTION	Type 1
IMPULSE VOLTAGE	330V
POLLUTION DEGREE	2
WIRING CONNECTIONS	Screw terminal block, 14 AWG to 22 AWG
WIRING ACCESS	**Rear:** 0.895" hole for conduit connection **Side:** M16 x 1.5 Cable gland
ENCLOSURE DIMENSIONS	116.5 mm H x 113.1 mm W x 54.0 mm D (4.59 in. x 4.45 in. x 2.13 in.)
ENCLOSURE MATERIAL	Grey polycarbonate with gasket, UL94-V0
ENCLOSURE RATING	IP65 (NEMA 4X)
PROBE, L X D	304 S/S, 104.8 mm x 12.7 mm (4.1 in. x 0.5 in.)
FILTER	20 Micron porous PTFE
WEIGHT	7.8 oz (220g), including probe
OPTIONAL CALIBRATION CERTIFICATE	NIST traceable 1-Point or 3-Point
COUNTRY OF ORIGIN	Canada

WIRING INFORMATION

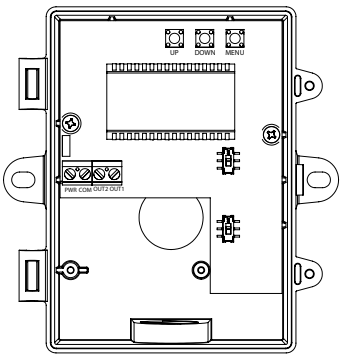

ANALOG WIRING

TERMINAL	FUNCTION
PWR	24 Vac/dc of controller or power supply
COM	To GND or COMMON of controller
OUT2	Analog Output 2
OUT1	Analog Output 1

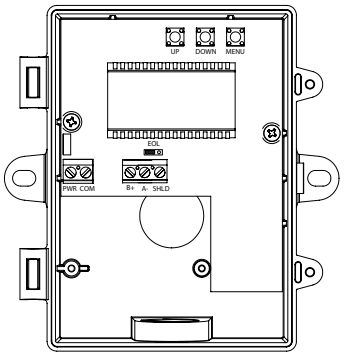

NETWORK WIRING

TERMINAL	FUNCTION
PWR	24 Vac/dc of controller or power supply
COM	To GND or COMMON of controller
B +	Network Output
A -	Network Output
SHLD	Network Output

Copyright © Greystone Energy Systems Inc. All Rights Reserved

ORDERING CODE

SERIES	APPLICATION		ENCLOSURE		LCD		ACCURACY	OUTPUT		PROBE	NIST CALIBRATION CERTIFICATE	
HTX2							**1**			**SP**		
	W	Wall Mount	**B**	Rear Cable Entry Hole for EMT 22.7mm D (0.895")	**C**	Concealed		**A**	Analog			None (Leave Blank)
			F	Side Cable Gland	**V**	Viewable		**B**	BACnet®		**1N**	1-Point RH/T
								M	Modbus		**3N**	3-Point RH/T

DIMENSIONS

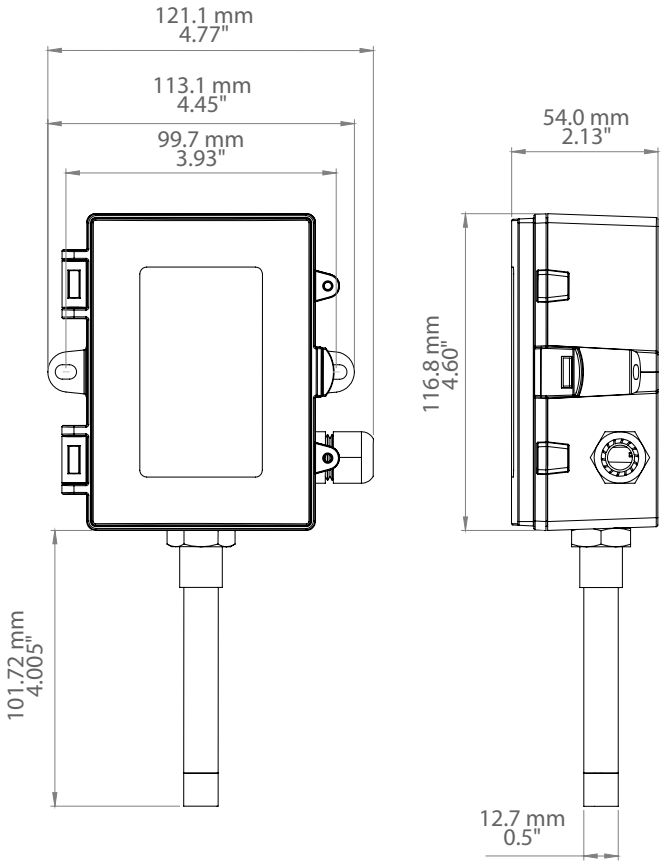

Copyright © Greystone Energy Systems Inc. All Rights Reserved