GREYSTONE
ENERGY SYSTEMS INC

DUCT HUMIDITY TRANSMITTER



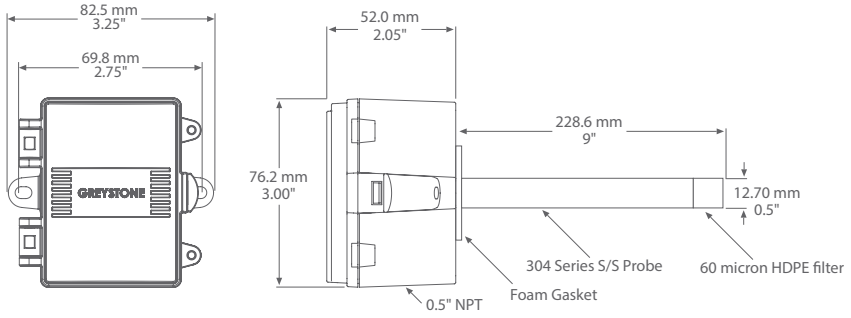

HSDT SERIES

PRODUCT DESCRIPTION

The duct humidity transmitter uses a highly accurate and reliable Thermoset Polymer based capacitance humidity sensor and state-of-the-art digital linearization and temperature compensated circuitry to monitor humidity levels. The sensor is encapsulated in a 230 mm (9") long by 12.7 mm (0.5") diameter 304 S/S probe. A 60 micron HDPE filter protects the sensor for contaminants. An optional integrated temperature sensor is available.

TYPICAL INSTALLATION

For complete installation and wiring details, please refer to the product installation instructions.

The duct type probes are installed through a hole in the side of the duct to monitor a single point humidity within the duct. Install the probe in a straight section of duct at a suitable distance downstream from any heating, cooling or humidification devices.

Mounting tabs on the outside of the enclosure for ease of installation.

A terminal block connection is provided. for connection to the Building Automation System.

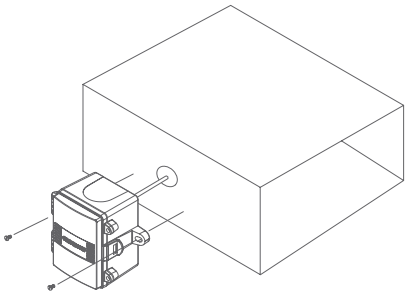

SPECIFICATIONS

SENSOR TYPE	Thermoset Polymer-based Capacitive Sensor Chip
SENSOR ACCURACY	±2, 3, or 5 %RH (5 to 95 %RH) @ 25°C
MEASUREMENT RANGE	0 to 100 %RH
RESOLUTION	±0.01 %RH
HYSTERESIS	±0.8 %RH @ 25°C (77°F)
REPONSE TIME	8 seconds
STABILITY	<0.25% RH/year
AMBIENT OPERATING RANGE	-40 to 60°C (-40 to 140°F)
OUTPUT SIGNAL	4-20 mA current loop, 0-5 Vdc, 0-10 Vdc, or 0-1 Vdc (field selectable)
OUTPUT DRIVE @ 24 VDC	**Current:** 550Ω max **Voltage:** 10,000Ω min
OPTIONAL TEMPERATURE SENSOR	Various RTD's and thermistors available as 2 wire resistance output
ENCLOSURE	**A:** ABS, UL94-V0, IP65 (NEMA 4X) **E:** Same as A, with thread adapter (1/2" NPT to M16) and cable gland fitting
PROBE	230mm (9") length x 12.7mm (1/2") diameter s/s with porous filter
TERMINATION	Screw terminal block (14 to 22 AWG)
PROTECTION CLASS	III
POWER SOURCE UL	24 Vac/dc ±10% typical, SELV (Class 2)
CONSUMPTION	22 mA @ 24 Vdc, 70 mA @ 24 Vac
EU CONFORMITY	CE
CERTIFICATION	UL 60730 & CSA E60730
UL 2043 / CSA / ULC S142 COMPLIANT	Suitable for Use in Air Handling Spaces in Accordance with Section 300.22, (C) of the National Electrical Code
PURPOSE OF CONTROL	Operating Control
TYPE OF ACTION	Type 1
IMPULSE VOLTAGE	330V
POLLUTION DEGREE	2
COUNTRY OF ORIGIN	Canada

GREYSTONE
ENERGY SYSTEMS INC

OPTIONAL ACCESSORIES - INCLUDED WITH E ENCLOSURE OPTION

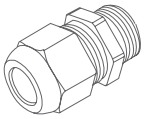

CABLE GLAND FITTING

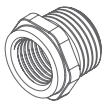

THREAD ADAPTER 1/2" NPT TO M16

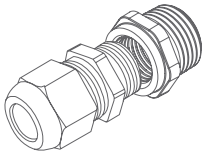

WIRING INFORMATION

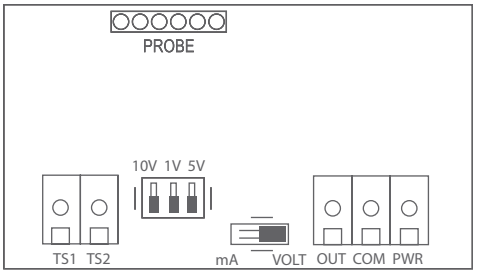

TERMINAL	FUNCTION
PWR	24 Vac/dc of controller or power supply
COM	COM GND or COMMON
OUT	Analog Output
TS1	Resistance Output
TS2	Resistance Output

ORDERING

PRODUCT	HSDT	Duct Humidity Transmitter
ENCLOSURE	**A**	ABS with hinged and gasketed cover
	E	Same as A, with thread adapter and cable gland fitting
RH ACCURACY	**2**	2%
	3	3%
	5	5%
OPTIONAL TEMPERATURE SENSOR	**00**	No Temperature Sensor Option
	02	100Ω Platinum, IEC 751, 385 Alpha, thin film, 3 wire
	05	1801Ω NTC Thermistor, ±0.2°C
	06	3000Ω NTC Thermistor, ±0.2°C
	07	10,000Ω Type 3, NTC Thermistor, ±0.2°C
	08	2.252KΩ NTC Thermistor, ±0.2°C
	12	1000Ω Platinum, IEC 751, 385 Alpha, thin film
	13	1000Ω Nickel, Class B, DIN 43760
	14	10,000Ω Type 3, NTC Thermistor, ±0.2°C c/w 11K shunt resistor
	20	20,000Ω NTC Thermistor, ±0.2°C
	24	10,000Ω Type 2, NTC Thermistor, ±0.2°C
	59	10,000Ω 25°C, ±%, B = 3435 ±1% (25/85)

PART NUMBER

HSDT

NOTE: Greystone Energy Systems, Inc. reserves the right to make design modifications without prior notice.

RoHS COMPLIANT

Greystone Energy Systems, Inc.
150 English Drive, Moncton,
New Brunswick, Canada E1E 4G7

Ph: +1 (506) 853-3057 Fax: +1(506) 853-6014
North America: 1-800-561-5611
E-mail: mail@greystoneenergy.com

Copyright © Greystone Energy Systems Inc. All Rights Reserved