# HIGH ACCURACY REMOTE PROBE STRAP-ON TEMPERATURE SENSOR




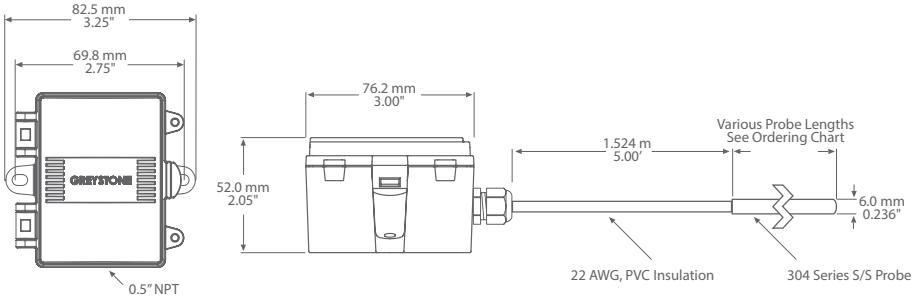


## HATSRP SERIES

## PRODUCT DESCRIPTION

The high accuracy single point strap-on temperature sensor utilizes a precision sensor encapsulated in a 6 mm (0.236") OD, 304 stainless steel probe and is available in various lengths (see ordering chart). Standard wire length is 1.5 m (5'). All probes are constructed to provide excellent heat transfer, fast response and are potted to resist moisture penetration.

## TYPICAL INSTALLATION

**For complete installation and wiring details, please refer to the product installation instructions.**

**For best results, thermal conductive compound should be applied to pipe prior to mounting the probe.**

Find a suitable location along the pipe where both the probe and remote enclosure can be mounted. If necessary, remove a section of insulation from pipe. Position probe directly on the pipe and secure using a pipe clamp. For added security, make 1 to 3 loops of the sensor cable around the pipe and feed through wire hole on the enclosure and secure using the supplied grommet. If applicable, the pipe insulation can be re-applied to the pipe over the probe.

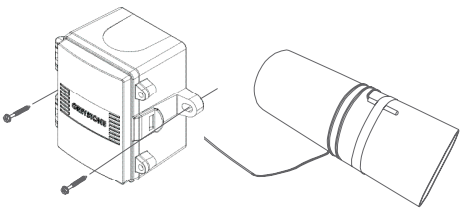

## SPECIFICATIONS

| | |
|---|---|
| SENSOR TYPE | Various Thermistor or RTD |
| SENSOR ACCURACY | **RTD Class A:** ±0.15°C (±0.27°F) @ 0°C (32°F)<br>**RTD 1/3 DIN:** ±0.1°C (±0.18°F) @ 0°C (32°F)<br>**RTD 1/10 DIN:** ±0.03°C (±0.054°F) @ 0°C (32°F)<br>**NTC Thermistor Type 39:** ±0.05°C (±0.09°F), 0 to 70°C (32 to 158°F)<br>**NTC Thermistor Type 40/46:** ±0.1°C (±0.18°F), 0 to 70°C (32 to 158°F) |
| PROBE SENSING RANGE | -40 to 100°C (-40 to 212°F) |
| AMBIENT OPERATING RANGE | -40 to 60°C (-40 to 140°F), 5 to 95 %RH non-condensing |
| WIRE MATERIAL | **RTD:** FT-4, 22 AWG, 3 Wire<br>**Thermistor:** PVC insulated, parallel bonded, 22 AWG. 2 Wire |
| WIRE LENGTH | 1.524m (5') |
| PROBE MATERIAL | 304 series stainless steel |
| PROBE DIAMETER | 6mm (0.236") |
| PROBE LENGTH | 50, 100, 150, 200 mm (2, 4, 6, 8") |
| ENCLOSURE | **A:** ABS, UL94-V0, IP65 (NEMA 4X)<br>**C:** Same as A, with a terminal block<br>**E:** Same as C, with thread adapter and cable gland fitting |
| TERMINATION | **A:** Pigtail, 2 or 3 wire<br>**C & E:** Terminal block, 2 or 3 wire |
| PROTECTION CLASS | III |
| POWER SOURCE UL | SELV, Limited Energy (<15W) |
| EU CONFORMITY | CE |
| CERTIFICATION | UL 60730 & CSA E60730 |
| UL 2043 / CSA / ULC S142 COMPLIANT | Suitable for Use in Air Handling Spaces in Accordance with Section 300.22, (C) of the National Electrical Code |
| PURPOSE OF CONTROL | Temperature Sensor |
| TYPE OF ACTION | Type 1 |
| IMPULSE VOLTAGE | 330V |
| POLLUTION DEGREE | 2 |
| COUNTRY OF ORIGIN | Canada |

**NOTE:** The sensor accuracies listed in the specifications section apply to the sensing element only prior to product assembly and may not be reflected in the complete assembly.

Due to the measurement uncertainty, it is possible, that the true resistance value of the single delivered sensor at 0°C can be out of the defined tolerance class. Profiling each assembly to take into consideration lead wire and the attachment method should be completed.

GREYSTONE
ENERGY SYSTEMS INC

## ACCESSORIES - INCLUDED WITH E ENCLOSURE OPTION

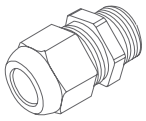

CABLE GLAND FITTING



THREAD ADAPTER 1/2" NPT TO M16

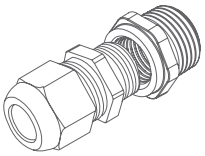

## ORDERING

| | | |
|---|---|---|
| PRODUCT | **HATSRP** | High Accuracy Remote Probe Strap-On Temperature Sensor |
| ENCLOSURE | **A** | ABS, with hinged and gasketed cover |
| | **C** | Same as A, with terminal block |
| | **E** | Same as C, with thread adapter and cable gland fitting |
| SENSOR | **18** | 1000 Ω Platinum, 3 wire, IEC 751, 385 Alpha, thin film, Class A |
| | **48** | 1000 Ω Platinum, 3 wire, IEC 751, 385 Alpha, thin film, 1/3 DIN |
| | **22** | 1000 Ω Platinum, 3 wire, IEC 751, 385 Alpha, thin film, 1/10 DIN |
| | **39** | 10,000 Ω Type 2, NTC Thermistor, ±0.05°C |
| | **40** | 10,000 Ω Type 3, NTC Thermistor, ±0.1°C |
| | **46** | 20,000 Ω NTC Thermistor, ±0.1°C |
| PROBE LENGTH | **A** | 50 mm (2") |
| | **B** | 100 mm (4") |
| | **C** | 150 mm (6") |
| | **D** | 200 mm (8") |

## PART NUMBER

| |
|---|
| **HATSRP** |
| |
| |
| |

NOTE: Greystone Energy Systems, Inc. reserves the right to make design modifications without prior notice.

RoHS COMPLIANT

Greystone Energy Systems, Inc.
150 English Drive, Moncton,
New Brunswick, Canada E1E 4G7

Ph: +1 (506) 853-3057 Fax: +1 (506) 853-6014
North America: 1-800-561-5611
E-mail: mail@greystoneenergy.com


Copyright © Greystone Energy Systems Inc. All Rights Reserved