GREYSTONE
ENERGY SYSTEMS INC

HIGH ACCURACY FLEXIBLE COPPER DUCT AVERAGE TEMPERATURE SENSOR



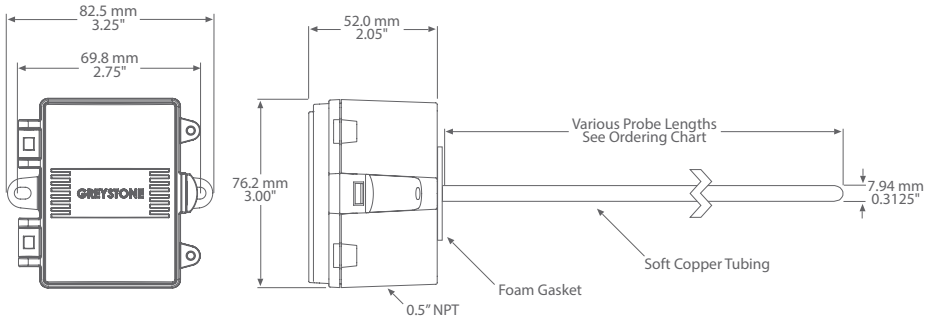

HATSDC SERIES

PRODUCT DESCRIPTION

The high accuracy flexible multi-point duct averaging temperature sensor utilizes several precision sensors spaced at equal distances and encapsulated in a 7.94 mm (0.3125") OD, soft copper probe, it is available in various lengths (see ordering chart). All probes provide excellent heat transfer, fast response and resistance to moisture penetration.

TYPICAL INSTALLATION

For complete installation and wiring details, please refer to the product installation instructions.

The duct average probes are installed through a hole in the side of the duct to monitor an average temperature within the duct. Select a probe length that allows for criss-crossing the duct multiple times. Install the probes in a straight section of duct at a suitable distance downstream from any heating, cooling or humidification devices.

Each enclosure style provides mounting tabs for ease of installation.

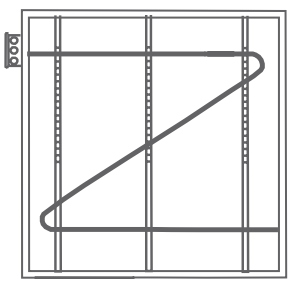

SPECIFICATIONS

SENSOR TYPE	Various Thermistor or RTD
SENSOR ACCURACY	**RTD Class A:** ±0.15°C (±0.27°F) @ 0°C (32°F) **RTD 1/3 DIN:** ±0.1°C (±0.18°F) @ 0°C (32°F) **RTD 1/10 DIN:** ±0.03°C (±0.054°F) @ 0°C (32°F) **NTC Thermistor Type 39:** ±0.05°C (±0.09°F), 0 to 70°C (32 to 158°F) **NTC Thermistor Type 40/46:** ±0.1°C (±0.18°F), 0 to 70°C (32 to 158°F)
PROBE SENSING RANGE	-20 to 60°C (-4 to 140°F)
AMBIENT OPERATING RANGE	-40 to 60°C (-40 to 140°F)
WIRE MATERIAL	FT-6 rated plenum cable, 22 AWG
PROBE MATERIAL	Soft copper
PROBE DIAMETER	7.94 mm (0.315")
STANDARD LENGTHS	1.8m, 3.6m, 6.1m, 7.3m, 15.2m (6', 12', 20', 24', 50')
ENCLOSURE	ABS, UL94-V0, IP65 (NEMA 4X) **C:** includes terminal block **E:** same as C, with thread adapter (1/2" NPT to M16), and cable gland fitting
TERMINATION	**A:** pigtail, 2 or 3 wire **C & E:** terminal block, 2 or 3 wire
PROTECTION CLASS	III
POWER SOURCE UL	SELV, Limited Energy (<15W)
EU CONFORMITY	CE
CERTIFICATION	UL 60730 & CSA E60730
UL 2043 / CSA / ULC S142 COMPLIANT	Suitable for Use in Air Handling Spaces in Accordance with Section 300.22, (C) of the National Electrical Code
PURPOSE OF CONTROL	Temperature Sensor
TYPE OF ACTION	Type 1
IMPULSE VOLTAGE	330V
POLLUTION DEGREE	2
COUNTRY OF ORIGIN	Canada

NOTE: The sensor accuracies listed in the specifications section apply to the sensing element only prior to product assembly and may not be reflected in the complete assembly.

Due to the measurement uncertainty, it is possible, that the true resistance value of the single delivered sensor at 0°C can be out of the defined tolerance class. Profiling each assembly to take into consideration lead wire and the attachment method should be completed.

GREYSTONE
ENERGY SYSTEMS INC

ACCESSORIES - INCLUDED WITH E ENCLOSURE OPTION

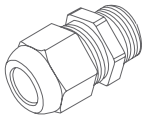

CABLE GLAND FITTING



THREAD ADAPTER 1/2" NPT TO M16

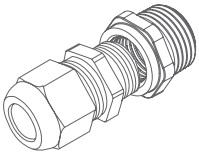

ORDERING

PRODUCT	**HATSDC**	High Accuracy Flexible Copper Duct Average Temperature Sensor
ENCLOSURE	**A**	ABS, with hinged and gasketed cover
	C	Same as A, with terminal block
	E	Same as C, with thread adapter and cable gland fitting
SENSOR	**18**	1000 Ω Platinum, IEC 751, 385 Alpha, thin film, Class A
	48	1000 Ω Platinum, IEC 751, 385 Alpha, thin film, 1/3 DIN
	22	1000 Ω Platinum, IEC 751, 385 Alpha, thin film, 1/10 DIN
	39	10,000 Ω Type 2, NTC Thermistor, ±0.05°C
	40	10,000 Ω Type 3, NTC Thermistor, ±0.1°C
	46	20,000 Ω NTC Thermistor, ±0.1°C
PROBE LENGTH	**I**	1.8m (6') 4-sensors
	J	3.6m (12') 4-sensors
	K	6.1m (20') 4-sensors
	L	7.3m (24') 9-sensors
	Q	15.2m (50') 16-sensors

PART NUMBER

HATSDC

NOTE: Greystone Energy Systems, Inc. reserves the right to make design modifications without prior notice.

RoHS COMPLIANT

Greystone Energy Systems, Inc.
150 English Drive, Moncton,
New Brunswick, Canada E1E 4G7

Ph: +1 (506) 853-3057 Fax: +1 (506) 853-6014
North America: 1-800-561-5611
E-mail: mail@greystoneenergy.com

Copyright © Greystone Energy Systems Inc. All Rights Reserved