GREYSTONE
ENERGY SYSTEMS INC

HIGH ACCURACY DUCT TEMPERATURE SENSOR



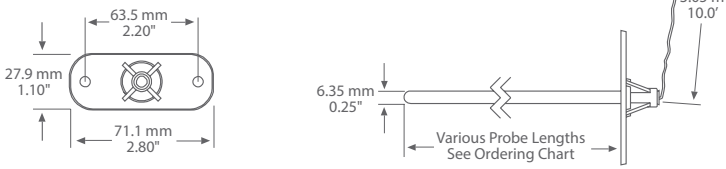

HATSBB SERIES

PRODUCT DESCRIPTION

The HATSBB single point duct temperature sensor utilizes a high accuracy sensor encapsulated in a 6.35 mm (0.25") OD, 304 series stainless steel probe and is available in various lengths (see ordering chart). All probes provide excellent heat transfer, fast response and resistance to moisture penetration. The HATSBB comes with an integrated mounting bracket and 3.05 m (10') of plenum rated cable for connection to the Building Automation System.

TYPICAL INSTALLATION

For complete installation and wiring details, please refer to the product installation instructions.

The duct type probes are installed through a hole in the side of the duct to monitor a single point temperature within the duct. Since the probes are tip sensitive, select a probe length that places the sensor well into the duct. Install the probe into a straight section of duct at a suitable distance downstream from any heating, cooling or humidification devices.

Two holes are provided on the bracket to secure the sensor to the duct.

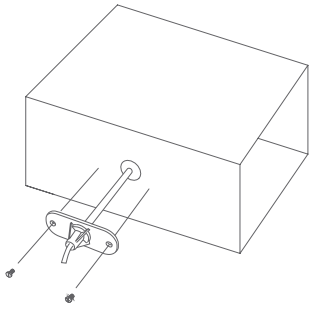

SPECIFICATIONS

SENSOR TYPE	Platinum RTD 1000 Ω, 385 Alpha @ 0˚C NTC Thermistor, 10,000 Ω @ 25˚C, Type 2 or 3 NTC Thermistor, 20,000 Ω @ 25˚C
SENSOR ACCURACY (ACCURACIES LISTED ARE APPLICABLE TO SENSING ELEMENT ONLY)	**RTD Class A:** ±0.15°C (±0.27°F) @ 0°C (32°F) **RTD 1/3 DIN:** ±0.1°C (±0.18°F) @ 0°C (32°F) **RTD 1/10 DIN:** ±0.03°C (±0.054°F) @ 0°C (32°F) **NTC Thermistor Type 39:** ±0.05°C (±0.09°F), 0 to 70°C (32 to 158°F) **NTC Thermistor Type 55:** ±0.03°C (±0.054°F), 0 to 70°C (32 to 158°F) **NTC Thermistor Type 40/46:** ±0.1°C (±0.18°F), 0 to 70°C (32 to 158°F)
PROBE SENSING RANGE	-20 to 60 °C (-4 to 140 °F) Higher Ranges Available Contact Greystone)
WIRE MATERIAL	Plenum rated, FT-6
WIRE LENGTH	3.05 m (10')
PROBE MATERIAL	304 series stainless steel
PROBE DIAMETER	6 mm (0.236")
BACKET MATERIAL	Grey ABS, UL94-V0
TERMINATION	Pigtail, 2 or 3 wire
COUNTRY OF ORIGIN	Canada

NOTE: The sensor accuracies listed in the specifications section apply to the sensing element only prior to product assembly and may not be reflected in the complete assembly.

Due to the measurement uncertainty, it is possible, that the true resistance value of the single delivered sensor at 0°C can be out of the defined tolerance class. Profiling each assembly to take into consideration lead wire and the attachment method should be completed.

GREYSTONE
ENERGY SYSTEMS INC

ORDERING			PART NUMBER
PRODUCT	**HATSBB**	High Accuracy Duct Temperature Sensor	**HATSBB**
SENSOR	**18**	1000 Ω Platinum, 3 Wire, IEC 751, 385 Alpha, thin film, Class A	
	48	1000 Ω Platinum, 3 Wire, IEC 751, 385 Alpha, thin film, 1/3 DIN	
	22	1000 Ω Platinum, 3 Wire, IEC 751, 385 Alpha, thin film, 1/10 DIN	
	39	10,000 Ω, Type 2, NTC Thermistor, ±0.05 C	
	55	10,000 Ω, Type 2, NTC Thermistor, ±0.03 C	
	40	10,000 Ω, Type 3, NTC Thermistor, ±0.1 C	
	46	20,000 Ω, NTC Thermistor, ±0.1 C	
PROBE LENGTH	**A**	50 mm (2″)	
	B	100 mm (4″)	
	C	150 mm (6″)	
	D	200 mm (8″)	
	E	300 mm (12″)	
	F	450 mm (18″)	

NOTE: Greystone Energy Systems, Inc. reserves the right to make design modifications without prior notice.

RoHS COMPLIANT

Greystone Energy Systems, Inc.
150 English Drive, Moncton,
New Brunswick, Canada E1E 4G7

Ph: +1 (506) 853-3057 Fax: +1 (506) 853-6014
North America: 1-800-561-5611
E-mail: mail@greystoneenergy.com

Copyright © Greystone Energy Systems Inc. All Rights Reserved