GREYSTONE ENERGY SYSTEMS INC

TECHNICAL DATA SHEET **DWOS Series**

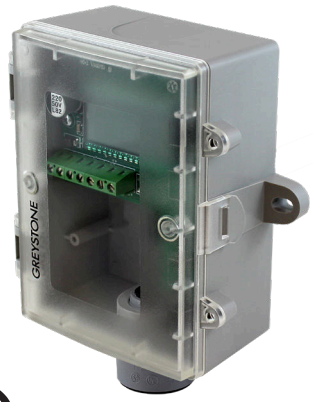

c UL us LISTED

OUTSIDE DEWPOINT TRANSMITTER

The outside dewpoint transmitters are designed for use in environmental monitoring and control systems where high performance and stability are demanded. It's state-of-the-art design combines digital linearization and temperature compensation with a highly accurate and reliable humidity sensor and curve-matched NTC thermistor temperature sensor for reliability and accuracy in the most critical applications.

The dewpoint series has five measurement variables which include dewpoint, dry-bulb temperature, wet bulb temperature, relative humidity and enthalpy which are available by either an analog, BACnet® or Modbus signal to provide the most efficient monitoring and control solution. A hinged and gasketed, weatherproof Polycarbonate enclosure is included for ease of installation.

SPECIFICATIONS

MEASUREMENT RANGE	**Relative Humidity:** 0 to 100 %RH **Dry Bulb Temperature:** -30 to 50°C (-22 to 122°F)
CALCULATED VALUES	**Dewpoint Temperature:** -30 to 50°C (-22 to 122°F) **Wet Bulb Temperature:** -30 to 50°C (-22 to 122°F) **Enthalpy:** 0 to 340 kJ/kg (0 to 146 BTU/lb)
ACCURACY	**Relative Humidity (RH):** ±2 %RH, 10 to 90 %RH @ 25°C **Dry Bulb Temperature (T):** ±0.2°C (±0.4°F) @ 0 to 50°C (32 to 122°F) **Dewpoint Temperature (Td):** ±1.0°C (±1.8°F) @ 40 %RH / 25°C **Wet Bulb Temperature (Tw):** ±1.0°C (±1.8°F) @ 50 %RH / 25°C **Enthalpy:** ±2 kJ/kg (±1 BTU/lb) @ 50 %RH / 25°C
LCD DISPLAY VALUES	**Relative Humidity:** 0 to 100% RH (1% Resolution) **Temperature:** -30.0 to 50.0°C (0.5°C res) or -22 to 122°F (1°F res) **Dewpoint:** -30.0 to 50.0°C Td (0.5°C res) or -22 to 122°F Td (1°F res) **Wet Bulb:** -20.0 to 50.0°C Tw (0.5°C res) or -4 to 122°F Tw (1°F res) **Enthalpy:** 0 to 340 kJ/kg (1 kJ/kg res) or 0 to 146 BTU/lb (1BTU/lb res)
BACnet® PROTOCOL	MS/TP, 2-wire RS-485, 0-127 slave address range *Baud rate* - 9600, 19200, 38400, 57600, or 115200
MODBUS PROTOCOL	RTU, 2-wire RS-485, 1-255 slave address range *Baud rate* - 300, 600, 1200, 2400, 4800, 9600, 19.2K, or 38.4K
OPERATING CONDITIONS	-30 to 60°C (-22 to 140°F), 0 to 95 %RH non-condensing
STORAGE CONDITIONS	-40 to 70°C (-40 to 158°F), 0 to 95 %RH non-condensing
WIRING CONNECTIONS	14 to 22 AWG screw terminal block
POWER SOURCE UL	24Vac/Vdc SELV (Class 2) 22 to 27Vdc or 16 to 27Vac, non-isolated, half wave rectified Consumption… **Current:** 50mA @ 24Vdc, 1.5VA max **Voltage:** 30mA @ 24vdc, 1VA @ 24Vac
OUTPUTS	**Analog (2X):** 4-20 mA, 0-5Vdc, 0-10 Vdc (field selectable) **Impedance @ 24 Vdc:** Current: 500Ω max, Voltage: 10KΩ min, Limited Energy < 15W **Network Communication:** BACnet® or Modbus
PROTECTION CLASS	III
UL MODEL	MRHLOSCSH
CERTIFICATION	UL 60730 & CSA E60730, (UL E539555 file#)
PURPOSE OF CONTROL	Operating Control
TYPE OF ACTION	Type 1
IMPULSE VOLTAGE	330V
POLLUTION DEGREEE	4
ENCLOSURE	**B:** UL Type 3R Raintight, Grey Polycarbonate UL94-V0 **Dimension:** 112.5 W x 116.5 H x 53.7mm D (4.43 x 4.58 x 2.11")
EU CONFORMITY / APPROVALS	CE
COUNTRY OF ORIGIN	Canada

Copyright © Greystone Energy Systems Inc. All Rights Reserved

Greystone Energy Systems, Inc.
321 Desbrisay Avenue, Moncton,
New Brunswick, Canada E1E 0J2

Ph: +1 (506) 853-3057 Fax: +1(506) 853-6014
North America: 1-800-561-5611
E-mail: mail@greystoneenergy.com

TYPICAL INSTALLATION

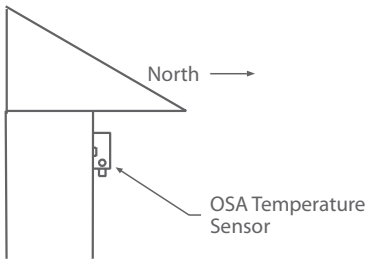

For complete installation and wiring details, please refer to the product installation instructions.

Select a suitable mounting spot on an exterior wall where the sensor is best protected from direct exposure to sunlight, wind, etc. preferably on a north facing wall. Do not mount the sensor near opening windows, supply/exhaust air louvres or other known air disturbances. Avoid areas where the sensor is exposed to vibrations or rapid temperature changes.

WIRING INFORMATION

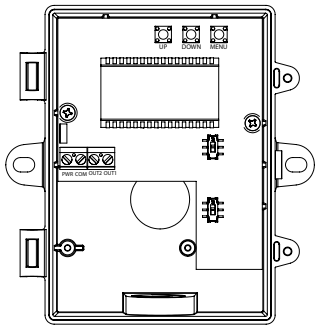

ANALOG WIRING

TERMINAL	FUNCTION
PWR	24 Vac/dc of controller or power supply
COM	To GND or COMMON of controller
OUT2	Analog Output 2
OUT1	Analog Output 1

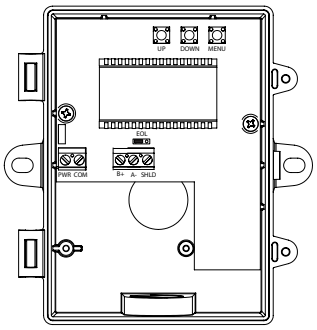

NETWORK WIRING

TERMINAL	FUNCTION
PWR	24 Vac/dc of controller or power supply
COM	To GND or COMMON of controller
B +	To + of communications bus
A -	To - of communications bus
SHLD	To communications bus shield

Copyright © Greystone Energy Systems Inc. All Rights Reserved

Greystone Energy Systems, Inc.
321 Desbrisay Avenue, Moncton,
New Brunswick, Canada E1E 0J2

Ph: +1 (506) 853-3057 Fax: +1(506) 853-6014
North America: 1-800-561-5611
E-mail: mail@greystoneenergy.com

DIMENTIONS

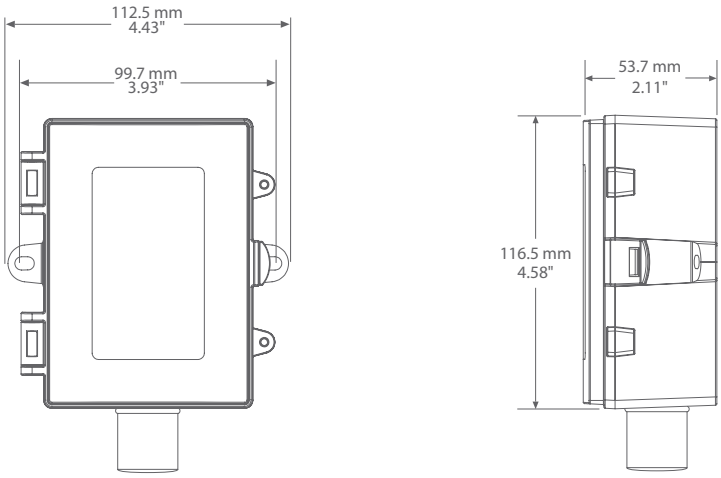

ORDERING

PRODUCT	**DWOS**	Outside Dewpoint Transmitter
ENCLOSURE	**B**	Polycarbonate, with hinged and gasketed cover
OUTPUT	**A** **B** **M**	Analog 4-20 mA, 0-5, 0-10 Vdc, field selectable BACnet® communications Modbus communications

PART NUMBER

DWOS

NOTE: Greystone Energy Systems, Inc. reserves the right to make design modifications without prior notice.

Copyright © Greystone Energy Systems Inc. All Rights Reserved

Greystone Energy Systems, Inc.
321 Desbrisay Avenue, Moncton,
New Brunswick, Canada E1E 0J2

Ph: +1 (506) 853-3057 Fax: +1(506) 853-6014
North America: 1-800-561-5611
E-mail: mail@greystoneenergy.com