GREYSTONE
ENERGY SYSTEMS INC

DUCT SMOKE DETECTOR



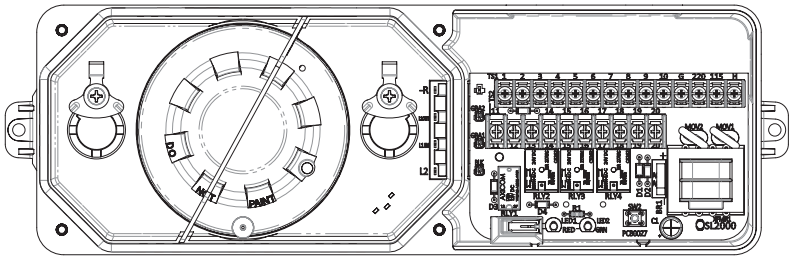

DSD2G SERIES

PRODUCT DESCRIPTION

The DSD2G is a 4 wire conventional duct smoke detector that offers fast installation, tool-less testing with cover in place and easy maintenance features. These detectors can be mounted horizontally or vertically for more adaptability in the field. They can be mounted to both round and rectangle ductwork. This unit senses smoke in the most challenging conditions, operating in airflow speeds of 0.5 to 20.32 m/sec (100 to 4000 ft/m), temperatures of 0 to 60ºC (32 to 140ºF), and a humidity range of 0 to 85% (non-condensing). A plug-in sensor head offers improved false alarm immunity and simple installation, testing, and maintenance.

FEATURES

- Patented No-Tools Required front or rear loading and removing sampling/exhaust tubes.
- Patented Test Port Valve allows for aerosol smoke testing without cover removal.
- Clear cover fitted with four captive No-Tools Required thumbscrews.
- Instantaneous cover removal trouble indication
- Staggered terminal blocks for easier wiring
- Detector head's LED indicates for normal status (flashing light), alarm status (solid state) or trouble (off)
- Magnet test capability (magnet included).
- Duct wall gaskets on back of enclosure are preinstalled.
- Unit's pcb board includes green pilot and red alarm visual indicators or off for trouble.
- External mounting tabs do not require cover removal to install.
- Colored cover gasket indicates proper cover seal
- Reset switch is also an alarm test switch
- Operating voltages: 230VAC, 115VAC, 24VAC, 24VDC
- Relay contacts: Two sets of 10A form C alarm contacts One set of 2A form A alarm contacts One set of 10A form C trouble contacts.
- Standard interchangeable "plug-in" UL268 photoelectric heads with advances internal dust filtering design.
- No additional screens or filters to clean
- Complete wiring details permanently attached to unit
- Low-Flow Technology (between 100-4000 ft./min)
- Listed for high-temperature applications
- Interconnect up to 30 units for common functions
- Footprint allows easy retrofit in many applications without additional drilling.
- Compatible with building automation and fire alarm systems

SPECIFICATIONS

SENSOR TYPE	Photoelectric (Interchangeable)	
POWER REQUIREMENTS (WITHOUT ACCESSORIES)	VOLTAGE	CURRENT
STANDBY	230 VAC	12 mA
	115 VAC	22 mA
	24 VAC	55 mA
	24 VDC	14 mA
ALARM	230 VAC	18 mA
	115 VAC	32 mA
	24 VAC	190 mA
	24 VDC	68 mA
RELAY CONTACT RATING:		
ALARM CONTACTS:	Resistive load: 2 sets form "C" rated at 10 Amps @ 115 VAC	
	Resistive load: 1 set form "A" rated at 2 Amps	
TROUBLE CONTACTS:	Resistive load: 1 set form "C" rated at 10 Amps @115VAC	
AIR VELOCITY:	100 to 4,000 ft./min.	
AMBIENT TEMPERATURE:	0ºC to 60ºC (32ºF to 140ºF)	
HUMIDITY:	85 ±5 % RH (@32 ±2°C; 86 ±3.6°F) Non-Condensing / Non-Freezing	
WIRING:	Solid or stranded: #12 to #22 AWG terminals	
APPROVALS:	UL & CUL Listed (UL268A, UROX, UROX7) File # S2829 CSFM Listed (3240-1004:105)	
MATERIAL:	Grey plastic backbox, clear plastic cover (Makrolon 94V-0)	
DIMENSIONS:	343 mm L x 114 mm W x 57 mm H (13 ½" x 4 ½" x 2 ¼")	
MAX. NET WT.:	1133 g (2 ½ lbs)	
HARDWARE:	7" exhaust tube, sampling tube end cap, mounting template, test magnet, and mounting hardware included	
SAMPLING TUBES:	STN-1.0 Sampling tube for 15cm - 31cm (6" - 12") duct width	
	STN-2.5 Sampling tube for 31cm - 91cm (12" - 3') duct width	
	STN-5.0 Sampling tube for 91cm - 152cm (3' - 5') duct width	
	STN-10.0 Sampling tube for 152cm - 304cm (5' - 10') duct width	
	FAST TUBE Sectional sampling tube, kit fits up to 228cm (90") duct width	

NOTE: Sampling tubes must be ordered separately and are required for proper installation

GREYSTONE
ENERGY SYSTEMS INC

WIRING INFORMATION

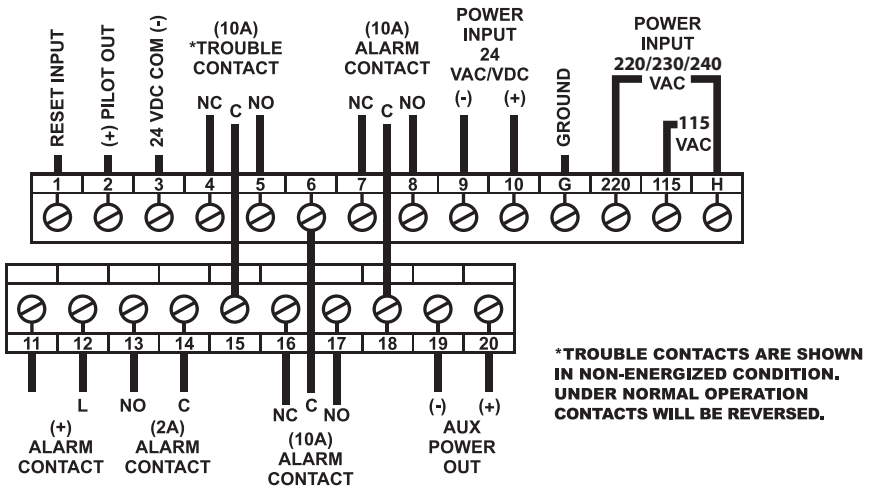

***TROUBLE CONTACTS ARE SHOWN IN NON-ENERGIZED CONDITION. UNDER NORMAL OPERATION CONTACTS WILL BE REVERSED.**

ORDERING

			PART NUMBER
PRODUCT	**DSD2G**	Duct Smoke Detector, Photoelectric	**DSD2G**

ACCESSORY ORDERING

			PART NUMBER
PRODUCT	**STN-**	Metal Duct Sampling Tube for DSD2G Series	**STN-**
DUCT SIZE	**1.0**	Duct widths between 15cm - 31cm (6" - 12")	
	2.5	Duct widths between 31cm - 91cm (12" - 3')	
	5.0	Duct widths between 91cm - 152cm (3' - 5')	
	10.0	Duct widths between 152cm - 304cm (5' - 10')	



ACCESSORY ORDERING

			PART NUMBER
PRODUCT	**FAST TUBE**	Expandable Plastic Sampling Tube 3x 61 cm (24") Pieces	**FAST TUBE**

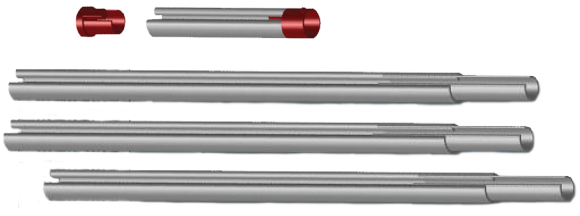

NOTE: Greystone Energy Systems, Inc. reserves the right to make design modifications without prior notice.

c UL us LISTED

3240-1004:105

ISO 9001

Greystone Energy Systems, Inc.
150 English Drive, Moncton,
New Brunswick, Canada E1E 4G7

Ph: +1 (506) 853-3057 Fax: +1 (506) 853-6014
North America: 1-800-561-5611
E-mail: mail@greystoneenergy.com

Copyright © Greystone Energy Systems Inc. All Rights Reserved