GREYSTONE
ENERGY SYSTEMS INC

CLEANROOM MONITOR



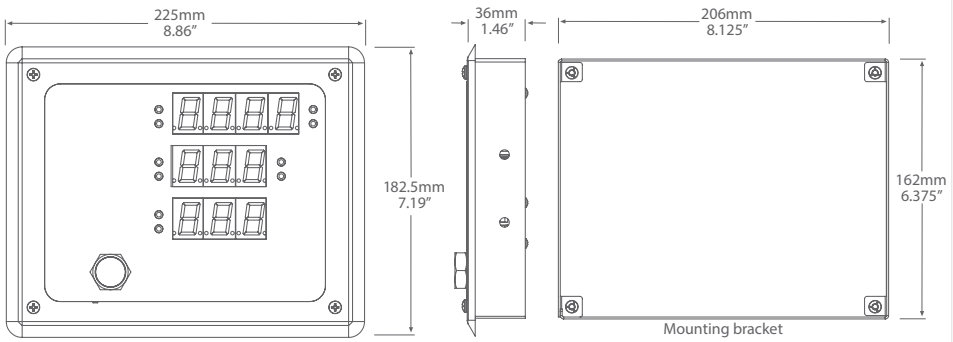

CR3A SERIES

PRODUCT DESCRIPTION

The CR3 Series Cleanroom Monitor was developed specifically to allow for monitoring of confined spaces with accuracy and reliability.

The CR3A features integrated sensors for monitoring temperature, humidity and pressure within the space it's mounted in. The CR3A is available with output signal of either Analog, BACnet ® or Modbus. Standard features include adjustable alarm relays for each parameter, audible/visual alarms, and large LED displays.

The CR3A is housed in a flush fitting stainless-steel front plate that enables the user to wipe down the unit when necessary.

TYPICAL INSTALLATION

For complete installation and wiring details, please refer to the product installation instructions.

The CR3 should be mounted inside an opening in the wall that is 210 mm wide x 167 mm high. Ensure the unit can be secured to a wall stud or equivalent on at least two sides.

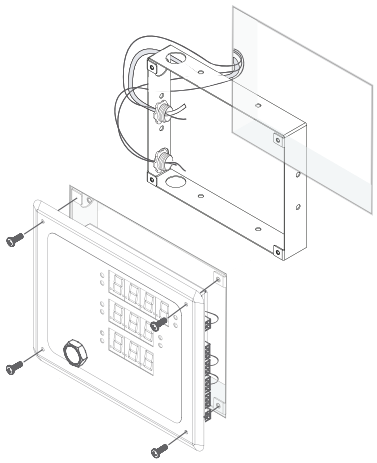

SPECIFICATIONS

TEMPERATURE INPUT	**Sensor Type:** 10KΩ NTC Thermistor **Temperature Range:** 0 to 50°C (32to 122°F) **Accuracy:** ±0.2°C (±0.4°F) curve matched
RELATIVE HUMIDITY INPUT	**Sensor Type:** Thermoset polymer based capacitive **RH Range:** 0 to 100 %RH **Accuracy:** ±2 %RH **Hysteresis:** ±1.5 %RH **Stability:** ±1.2 %RH typical @ 50 %RH in 5 years
DIFFERENTIAL PRESSURE INPUT	**Sensor Type:** MEMS piezo resistive differential **Pressure Ranges:** *01* - ±250Pa or ±25mmWC, *02* - ±500Pa or ±50mmWC **Accuracy:** ±0.5 %FS **Stability:** ±0.5 %FS max 1 year **Thermal Effect:** <±1 %FS, 0 to 70°C (32 to 158°F) **Proof Pressure:** 24.9 kPa (2490 mmWC) **Burst Pressure:** 74.7 kPa (7470 mmWC) **Media Compatibility:** Dry air or inert gas
INDICATION	**Temperature Display:** 3 digit LED as 0.0-50.0°C or 32.0-122°F (°C/°F by LED) **Relative Humidity Display:** 3 digit LED as 0.0-99.9 %RH **Differential Pressure Display:** 3 1/2 digit LED display as -500-500 Pa or -50.0-50.0 mmWC (Pa / mmWC is indicated by an LED) **Digit Type:** 7 segment red LED, 0.80" (20.32 mm) high **Alarm Indication:** Low / High alarm red LED for each parameter (T + RH + DP)
USER INPUT	**Programming:** Menu / Up / Down front panel tactile keys **Alarm Silence:** Silence front panel tactile key
ANALOG OUTPUTS	**Signal Type:** 4-20 mA (sourcing) and 0-5 Vdc / 0-10 Vdc selectable **Number of Outputs:** 3 (Temp, RH, DP) **Output Drive:** *Current* - 500Ω max, *Voltage* - 10 KΩ min **Output Scales:** 0 to 50°C, 0 to 100 %RH, ±500 Pa
ALARM OUTPUTS	**Number of Outputs:** 3 (Temp, RH, DP), can assign condition as low/high/both **Output Type:** NO optically isolated solid state FET switch **Contact Rating:** 100 mA at 28 Vac / 40 Vdc maximum **Trip Point:** Upper and Lower alarms adjustable **Alarm Delay:** 0 to 255 seconds (programmable) **Operation:** Self-resetting, non-latching **Alarm Buzzer:** Internal, operates on any alarm condition **Buzzer Delay:** 0-255 seconds (programmable) **Operations:** Self-resetting, can be silenced via silence button or disabled remotely via BACnet® or Modbus
COMMUNICATION	**Hardware:** Isolated 2-wire RS-485 MS/TP **Software:** Modbus RTU or BACnet® **Baud Rate:** 9600, 19200, 38400, 57600, 76800 or 115200 **Address Range:** *Modbus* - 1-255, *BACnet®* - 0-127
OPERATING CONDITIONS	0 to 50°C (32 to 122°F), 0-90 %RH non-condensing
STORAGE TEMPERATURE	-20 to 60°C (-4 to 140°F)
POWER SUPPLY	24-30 Vdc / 20-26 Vac
POWER CONSUMPTION	200 mA max
WIRING CONNECTIONS	Pluggable screw terminal block (14 to 22 AWG)
PRESSURE CONNECTIONS	Port for 1/8" ID tubing
PROTECTION	IP65 front plate
ENCLOSURE	Wall mount enclosure, SS304, suitable for wipe-down 255mm W x 182.5mm H x 36mm D (8.86" x 7.19" x 1.46")
WEIGHT	1.3 kg
CERTIFICATION	CE, RoHS
COUNTRY OF ORIGIN	Canada

GREYSTONE
ENERGY SYSTEMS INC

BACnet® COMMUNICATION

BACnet® is a data communication protocol for building automation and control networks. The detector communicates on a standard 2-wire RS-485 MS/TP (master-slave/token-passing) network designed to run at speeds from 9600 to 76800 baud over twisted pair wiring.

BACnet® is a registered trademark of ASHRAE. ASHRAE does not endorse, approve or test products for compliance with ASHRAE standards. Compliance of listed products to the requirements of ASHRAE Standard 135 is the responsibility of BACnet International (BI). BTL is a registered trademark of BI.

MODBUS COMMUNICATION

Modbus is a network protocol for industrial manufacturing environments. The detector communicates on a standard Modbus network using either of two transmission modes: RTU (Remote Terminal Unit) or ASCII (American Standard Code for Information Interchange). The hardware interface is RS-485. Select the desired mode along with the other parameters using the Configuration Menu.

ORDERING			PART NUMBER
PRODUCT	**CR3**	S/S Clean Room Sensor - Temperature, Humidity & Low Pressure	CR3
LCD DISPLAY	**A**	Integrated front plate mounted sensors	
PRESSURE RANGE	**01** **02**	±250 Pa or ±25 mmWC ±500 Pa or ±50 mmWC	
OUTPUT	**ANA** **BAC** **MOD**	Analog (3x) BACnet® Communications Modbus Communications	

NOTE: Greystone Energy Systems, Inc. reserves the right to make design modifications without prior notice.

RoHS COMPLIANT

Greystone Energy Systems, Inc.
150 English Drive, Moncton,
New Brunswick, Canada E1E 4G7

Ph: +1 (506) 853-3057 Fax: +1 (506) 853-6014
North America: 1-800-561-5611
E-mail: mail@greystoneenergy.com

Copyright © Greystone Energy Systems Inc. All Rights Reserved