GREYSTONE
ENERGY SYSTEMS INC

CONDENSATION PREVENTION SENSOR



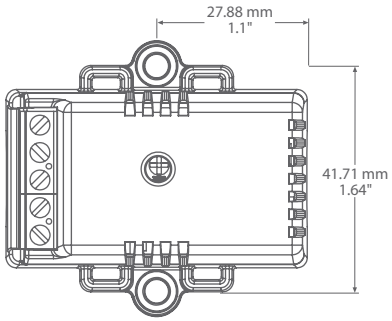

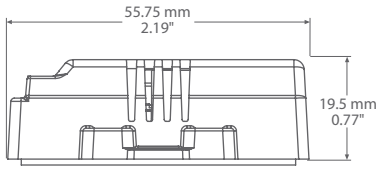

CP SERIES

PRODUCT DESCRIPTION

The CP Condensation Prevention sensor uses a field-proven humidity sensor combined with a tightly-coupled precision thermistor to provide early warning of condensing conditions in chilled beam / ceiling applications and prevent "indoor rain" condensation. The sensor can also be used in any heating, ventilation or air conditioning application to where condensation must be avoided.

TYPICAL INSTALLATION

For complete installation and wiring details, please refer to the product installation instructions.

The sensor can be mounted directly to a pipe or wall. The metal plate mounting base has a curvature to fit pipes up to 50.8mm (2") in diameter for minimal installation effort.

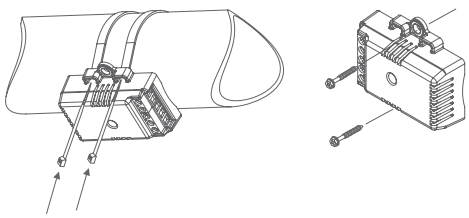

SPECIFICATIONS

TEMPERATURE ACCURACY	±0.2°C (±0.4°F), 0 to 50°C (32 to 122°F)
HUMIDITY ACCURACY	±3 %RH @ 90 %RH
RESPONSE TIME	<1 second
SETPOINT RANGE	±2°C (dewpoint)
ALARM CONTACT RATING	Form C (NO + NC), 1A @ 24 Vac/dc
ALARM HYSTERESIS	1 minute delay on alarm to prevent false alarms
ENCLOSURE	**Dimensions:** 56mm x 50mm x 21mm **Material:** Grey ABS **Ratings:** IP30 (NEMA 1) **Weight:** 35 grams
POWER SUPPLY	5 to 28 Vac/dc
CONSUMPTION	3 mA max @ 24 Vdc max
OPERATING CONDITIONS	0 to 50°C (32 to 122°F), 5 to 95 %RH non-condensing
STORAGE CONDITIONS	-30 to 70°C (-22 to 158°F)
LEAD TYPE (OPTIONAL)	FT-6 Plenum rated, 4 conductor
LEAD LENGTH (OPTIONAL)	1, 5, and 10 meter
WIRING CONNECTIONS	14-22 AWG terminal block
COUNTRY OF ORIGIN	Canada

ORDERING

PRODUCT	**CP**	Condensation Prevention Sensor
LEAD	**00**	No lead
	01	1m (3.3')
	05	5m (16.5')
	10	10m (32.8')

PART NUMBER

CP

NOTE: Greystone Energy Systems, Inc. reserves the right to make design modifications without prior notice.

RoHS COMPLIANT

Greystone Energy Systems, Inc.
150 English Drive, Moncton,
New Brunswick, Canada E1E 4G7

Ph: +1 (506) 853-3057 Fax: +1 (506) 853-6014
North America: 1-800-561-5611
E-mail: mail@greystoneenergy.com

Copyright © Greystone Energy Systems Inc. All Rights Reserved