GREYSTONE ENERGY SYSTEMS INC

DUCT AIR VELOCITY TRANSMITTER



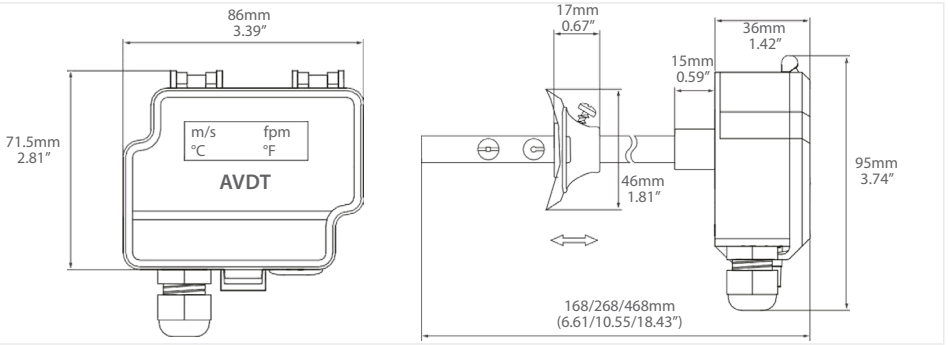

AVDT SERIES

DESCRIPTION

The AVDT series of air velocity transmitters is engineered for building automation in the HVAC/R industry. The AVDT measures air velocity and temperature, with field selectable ranges and output options in a single device. Designed with a duct mount probe that is available in different lengths and adjustable collar suitable for round or rectangular ducts. Options include a relay, and a backlit LCD that is selectable in Metric or Imperial measurements

TYPICAL INSTALLATION

For complete installation and wiring details, please refer to the product installation instructions.

The AVDT should be mounted in an easily accessible location in a straight section of duct at least five feet from corners or other items that may cause disturbances in the air flow.

Ensure that the end of the probe reaches the middle of the duct. Tighten the screws on the flange to hold the probe in position.

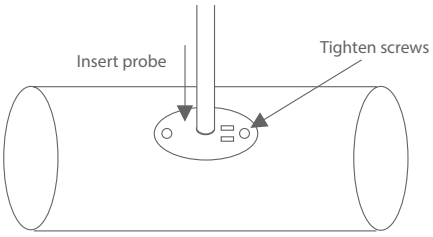

SPECIFICATIONS

VELOCITY RANGES (SELECTABLE)	**Non Display Models:** 0-2 m/s (0-393.7 fpm) 0-10 m/s (0-1968.5 fpm) 0-20 m/s (0-3937 fpm) **Display Models:** 0-2 m/s (0-400 fpm) 0-10 m/s (0-2000 fpm) 0-20 m/s (0-4000 fpm)
VELOCITY ACCURACY	**Metric:** *Range* - 0...2 m/s: <0.2 m/s + 2% from reading *Range* - 0...10 m/s: <0.5 m/s + 3% from reading *Range* - 0...20 m/s: <1.0 m/s + 3% from reading **Imperial:** *Range* - 0...400 fpm: <20 fpm + 2% from reading *Range* - 0...2000 fpm: <100 fpm + 3% from reading *Range* - 0...4000 fpm: <200 fpm + 3% from reading
TEMPERATURE RANGE	-25 to 50°C (-13 to 122°F) probe
TEMPERATURE ACCURACY	<0.5°C for velocity >0.5 m/s (<0.9°F for v > 100 fpm)
MEDIA COMPATIBILITY	Dry air or non-aggressive gases
WARM-UP TIME	15 seconds
OUTPUT SIGNAL 1 (Tout)	0-10 Vdc (linear to temperature) load > 1K Ω 4-20 mA (linear to temperature) load 20-400 Ω
OUTPUT SIGNAL 2 (Vout)	0-10 Vdc (linear to m/s or FPM) load > 1K Ω 4-20 mA (linear to m/s or FPM) load 20-400 Ω
ACCURACY	Vout: ± 0.025 V at 25 °C Iout: typically ±0.04 mA at 25 °C, load 100 Ω Max. ± 0.1 mA at 25 °C, load 20...400 Ω
OPTIONAL COMMUNICATION	Modbus RTU
POWER SUPPLY	24 Vdc / 24 Vac ±10%
CURRENT CONSUMPTION	**Current:** 120mA (130mA w/Relay) **Voltage:** 80mA (90mA w/Relay)
OPTIONAL DISPLAY	2-lines (12 characters/line), 46.0 x 14.5mm (1.81 x 0.57″) Line 1: Velocity / Line 2: Temperature (default) Metric: m/s and °C or Imperial: fpm and °F Line 1: Relay direction (Rise/Fall) / Line 2: Relay status (optional)
OPTIONAL RELAY OUTPUT	Potential free SPDT (NC, COM, NO). 230 Vac, 6A / 30 Vdc, 6A adjustable switching point and hysteresis (Requires LCD for setup)
ENCLOSURE	Case: ABS Cover: Polycarbonate Ratings: IP54 (NEMA 3) Probe: 304 series stainless steel Mounting Flange: LLPDP
OPERATING CONDITIONS	0 to 50°C (32 to 122°F), 0 to 95 % RH, non-condensing
STORAGE TEMPERATURE	-20 to 70°C (-4 to 158°F)
DIMENSIONS (W X H X D)	86x95x168mm (3.39x3.74x6.61″), probe @ 100mm (3.94″) 86x95x268mm (3.39x3.74x10.55″), probe @ 200mm (7.87″) 86x95x468mm (3.39x3.74x18.43″), probe @ 400mm (15.75″)
MOUNTING	With a duct flange, probe immersion length adjustable: 50-80mm (1.97-3.15″), probe @ 100mm (3.94″) 50-180mm (1.97-7.09″), probe @ 200mm (7.87″) 50-380mm (1.97-14.96″), probe @ 400mm (15.75″)
ELECTRICAL CONNECTIONS	Power Supply & Signal Out: 4-screw terminal block 12'24 AWG (0.2 to 1.5mm^2) Relay Out: 3-screw terminal block 12-24 AWG (0.2 to 1.5mm^2)
CABLE ENTRY	M16 (0.625″) cable gland, 2 x M16 cable gland,with "R" and "Modbus" models
WEIGHT	220g (7.76oz)
APPROVALS	CE, RoHS
COUNTRY OF ORIGIN	Finland

GREYSTONE
ENERGY SYSTEMS INC

WIRING INFORMATION

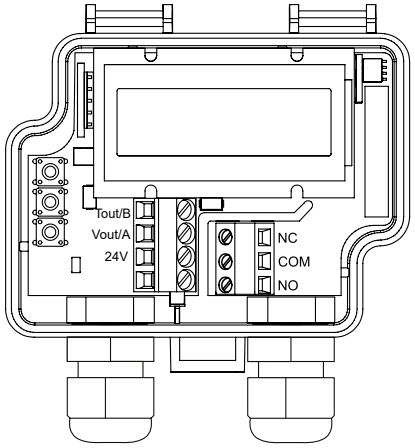

TERMINAL	FUNCTION
Tout/B	Temp Analog / Modbus
Vout/A	Velocity Analog / Modbus
24 V	Power Supply
GND	Power/Signal Common
NC	Relay Digital Output
COM	Relay Common
NO	Relay Digital Output

ORDERING

PRODUCT	**AVDT**	Duct Air Velocity Transmitter
DISPLAY	**X**	None
	M	LCD Display
RELAY	**X**	None
	R	Adjustable Relay (requires LCD)
OUTPUT SIGNAL	**-**	Analog (Leave Blank)
	M	Modbus (requires LCD)
PROBE LENGTH	**-**	200mm (7.87") (Leave Blank)
	100	100mm (3.94")
	400	400mm (15.75")

PART NUMBER

AVDT

NOTE: Greystone Energy Systems, Inc. reserves the right to make design modifications without prior notice.

RoHS COMPLIANT

Greystone Energy Systems, Inc.
150 English Drive, Moncton,
New Brunswick, Canada E1E 4G7

Ph: +1 (506) 853-3057 Fax: +1 (506) 853-6014
North America: 1-800-561-5611
E-mail: mail@greystoneenergy.com

Copyright © Greystone Energy Systems Inc. All Rights Reserved