GREYSTONE ENERGY SYSTEMS INC

TECHNICAL DATA SHEET **APD Series**



DESCRIPTION AND FEATURES

- Resistance-free differential gauge for all air and non-corrosive gas installations
- Industrial grade die-cast aluminum case
- Extreme temperature tolerance with o-ring seal
- Easily accessible re-zero adjustment screw
- 2% full scale accuracy*
- 3 mounting adapters with screws included, other mounting accessories also available
- 5 year warranty

SPECIFICATIONS

DIAL	4" (100mm), white aluminum with black and red markings
CASE	Die-cast black aluminum
LENS	Polycarbonate with UV protection
RING	Threaded die-cast black aluminum
CONNECTION	1/8" NPTF high & low pressure taps, side & back
MOVEMENT	Resistance-free and magnetic
POINTER	Aluminum, anodized black
OVER-PRESSURE LIMIT	Maximum pressure of 14.5 psi / 100 kPa
AMBIENT / PROCESS TEMPERATURE	-40° to 60°C (-40° to 140°F) -10° to 60°C (14° to 140°F)
ACCURACY	±2% of full scale value*
ENCLOSURE RATING	IP67
WARNING	This product can expose you to chemicals including lead, which is known to the State of California to cause cancer and birth defects or other reproductive harm. For more information go to www.P65Warnings.ca.gov.

** Unless otherwise noted*

APPLICATIONS

- Low pressure and differential monitoring for air and non-combustible gases including filters, blowers, air handlers and clean rooms

TYPICAL INSTALLATION

For complete installation details, please refer to the product installation instructions.

Before installation and operation, ensure that the correct pressure gauge has been selected, consider the pressure range, ambient and process conditions and that the product is in good working order. Differential Gauge is suitable for very low pressure installations and is compatible with dry and clean air or non-corrosive gases. Install the instrument in a location suitable for the specification of the gauge and free of pulsation and vibration. APD Series gauges are calibrated in the vertical position so they should be installed in the same manner to ensure accuracy.

NOTE: APD to only be mounted in a vertical position

Copyright © Greystone Energy Systems Inc. All Rights Reserved
Greystone Energy Systems, Inc.
321 Desbrisay Avenue, Moncton,
New Brunswick, Canada E1E 0J2

Ph: +1 (506) 853-3057 Fax: +1(506) 853-6014
North America: 1-800-561-5611
E-mail: mail@greystoneenergy.com

AIR PRESSURE DIFFERENTIAL

Part Number	Range	Accuracy / ACC.	Description
APDGWC00050U ▪	0/0.5"WC	±3% FS accuracy	Air Pressure Differential, 0/0.5"WC, 4" dial, ±3% FS accuracy
APDGWC00100U	0/1"WC	±2% FS accuracy	Air Pressure Differential, 0/1"WC, 4" dial, ±2% FS accuracy
APDGWC00200U	0/2"WC	±2% FS accuracy	Air Pressure Differential, 0/2"WC, 4" dial, ±2% FS accuracy
APDGWC00300U	0/3"WC	±2% FS accuracy	Air Pressure Differential, 0/3"WC, 4" dial, ±2% FS accuracy
APDGWC00500U	0/5"WC	±2% FS accuracy	Air Pressure Differential, 0/5"WC, 4" dial, ±2% FS accuracy
APDGPA00150U ▪	0/150 Pa	±3% FS accuracy	Air Pressure Differential, 0/150 Pa , 4" dial, ±3% FS accuracy
APDGPA00300U	0/300 Pa	±2% FS accuracy	Air Pressure Differential, 0/300 Pa , 4" dial, ±2% FS accuracy
APDGPA00500U	0/500 Pa	±2% FS accuracy	Air Pressure Differential, 0/500 Pa , 4" dial, ±2% FS accuracy
APDGPA00750U	0/750 Pa	±2% FS accuracy	Air Pressure Differential, 0/750 Pa , 4" dial, ±2% FS accuracy
APDGPA01000U	0/1,000 Pa	±2% FS accuracy	Air Pressure Differential, 0/1,000 Pa , 4" dial, ±2% FS accuracy
APDAAFK		APDG accessories	APDG accessories Air Filter Kit
APDAPT25M		APDG accessories	APDG accessories Plastic Tubing 25M
APDAPT50M		APDG accessories	APDG accessories Plastic Tubing 50M
APDAPT100M		APDG accessories	APDG accessories Plastic Tubing 100M
APDAPT200M		APDG accessories	APDG accessories Plastic Tubing 200M
APDASMK		APDG accessories	APDG accessories Surface mounting bracket
APDASPTF		APDG accessories	APDG accessories Static Pressure tip with Flange

Note: Max. pressure rating is 14.5 psi

Other ranges and connection sizes available upon request. For scale change, refer to How to Order Guide for scale codes.

- ±3% of full scale value accuracy

DIMENSIONS

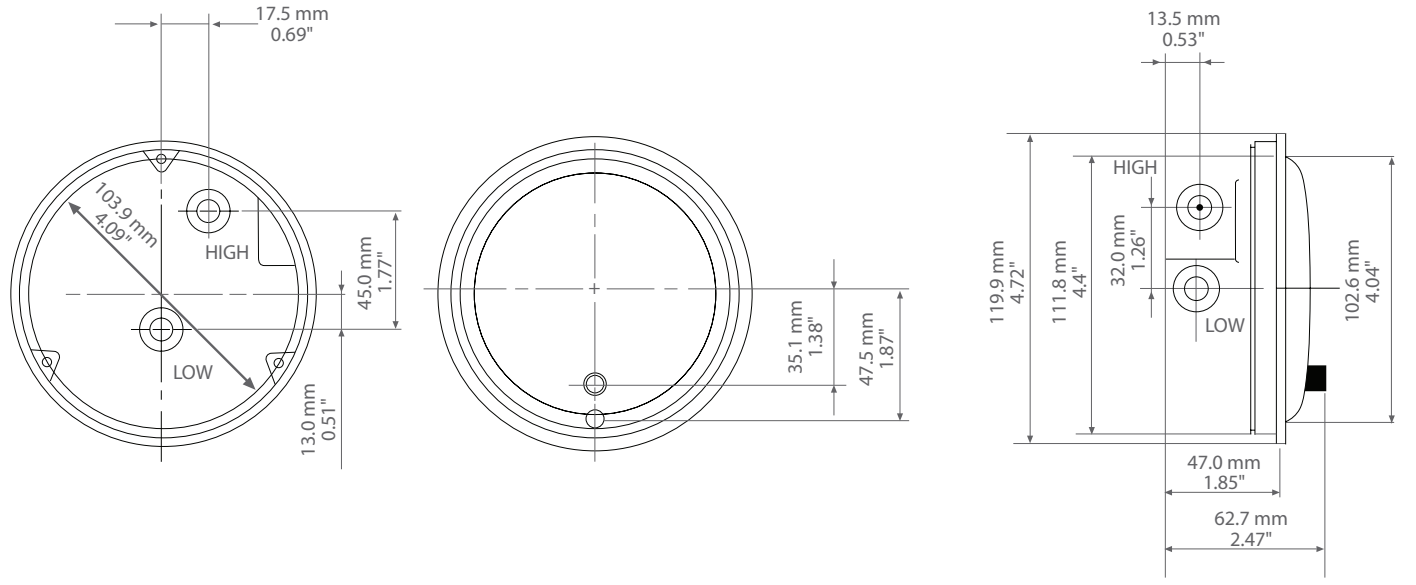

Copyright © Greystone Energy Systems Inc. All Rights Reserved
Greystone Energy Systems, Inc.
321 Desbrisay Avenue, Moncton,
New Brunswick, Canada E1E 0J2
Ph: +1 (506) 853-3057 Fax: +1(506) 853-6014
North America: 1-800-561-5611
E-mail: mail@greystoneenergy.com

AIR PRESSURE DIFFERENTAL DIAL GAUGE – ACCESSORIES

APDAAFK - AIR PRESSURE DIFFERENTIAL ACCESSORIES, AIR FILTER KIT

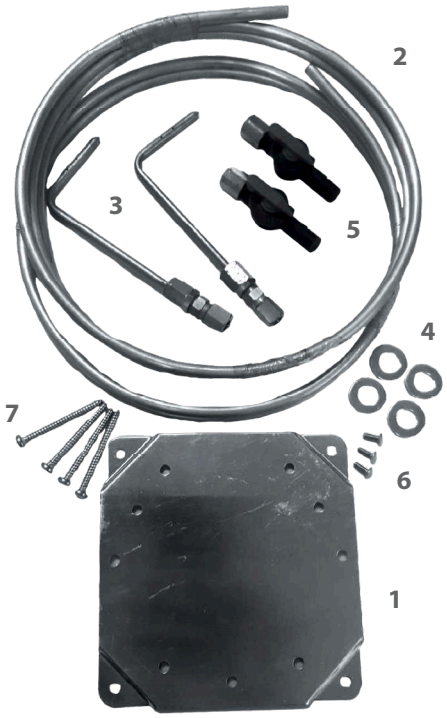

1. APDA Surface mounting bracket
2. Aluminum tubing
3. Static pressure tips with compression fittings
4. Washers
5. 3-way values with compression fittings
6. Short screws
7. Long screws

WARNING

This product can expose you to chemicals including lead, which is known to the State of California to cause cancer and birth defects or other reproductive harm.

For information go to www.P65Warnings.ca.gov

STATIC PRESSURE TIPS WITH COMPRESSION FITTINGS DIMENSIONS

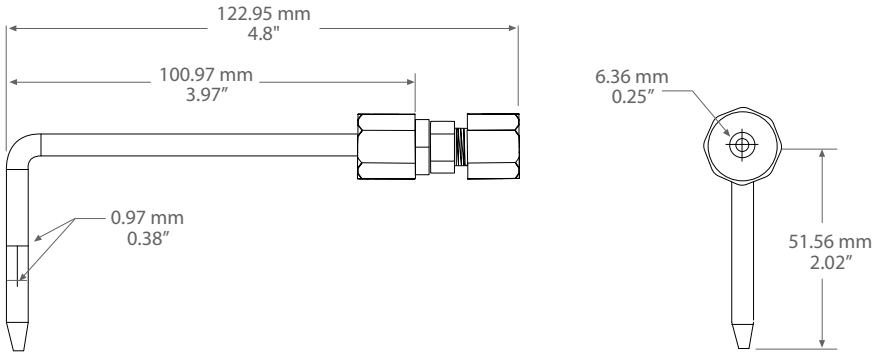

Copyright © Greystone Energy Systems Inc. All Rights Reserved
Greystone Energy Systems, Inc.
321 Desbrisay Avenue, Moncton,
New Brunswick, Canada E1E 0J2
Ph: +1 (506) 853-3057 Fax: +1(506) 853-6014
North America: 1-800-561-5611
E-mail: mail@greystoneenergy.com

APDAPTXXM - AIR PRESSURE DIFFERENTIAL ACCESSORIES, PLASTIC TUBING



Transparent silicone tube with a 1.8 mm wall thickness.
Refer the below model selection.

Length in Meter	Code
25	APDAPT25M
50	APDAPT50M
100	APDAPT100M
200	APDAPT200M

APDASMK - AIR PRESSURE DIFFERENTIAL ACCESSORIES, SURFACE MOUNTING BRACKET



Plastic back plate for APD Series

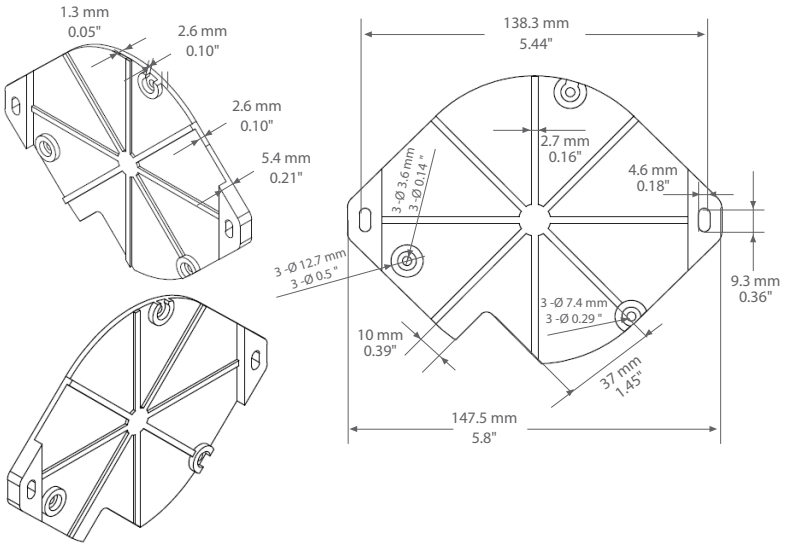

APDASPTF - AIR PRESSURE DIFFERENTIAL ACCESSORIES, STATIC PRESSURE TIP WITH FLANGE



Two plastic static probes in light grey, with a 6 mm (0.23”) outer diameter and a length of 59 mm (2.32”)

Copyright © Greystone Energy Systems Inc. All Rights Reserved
Greystone Energy Systems, Inc.
321 Desbrisay Avenue, Moncton,
New Brunswick, Canada E1E 0J2
Ph: +1 (506) 853-3057 Fax: +1(506) 853-6014
North America: 1-800-561-5611
E-mail: mail@greystoneenergy.com