SMART PRESSURE TRANSMITTER
APC-2000ALM
with MODBUS RTU protocol

- ✓ **Galvanic isolation of power supply and communication bus**
- ✓ **Accuracy 0.075%**
- ✓ **Aluminum or stainless steel housing with local display**
- ✓ **Explosion proof certificate ATEX and IECEx**

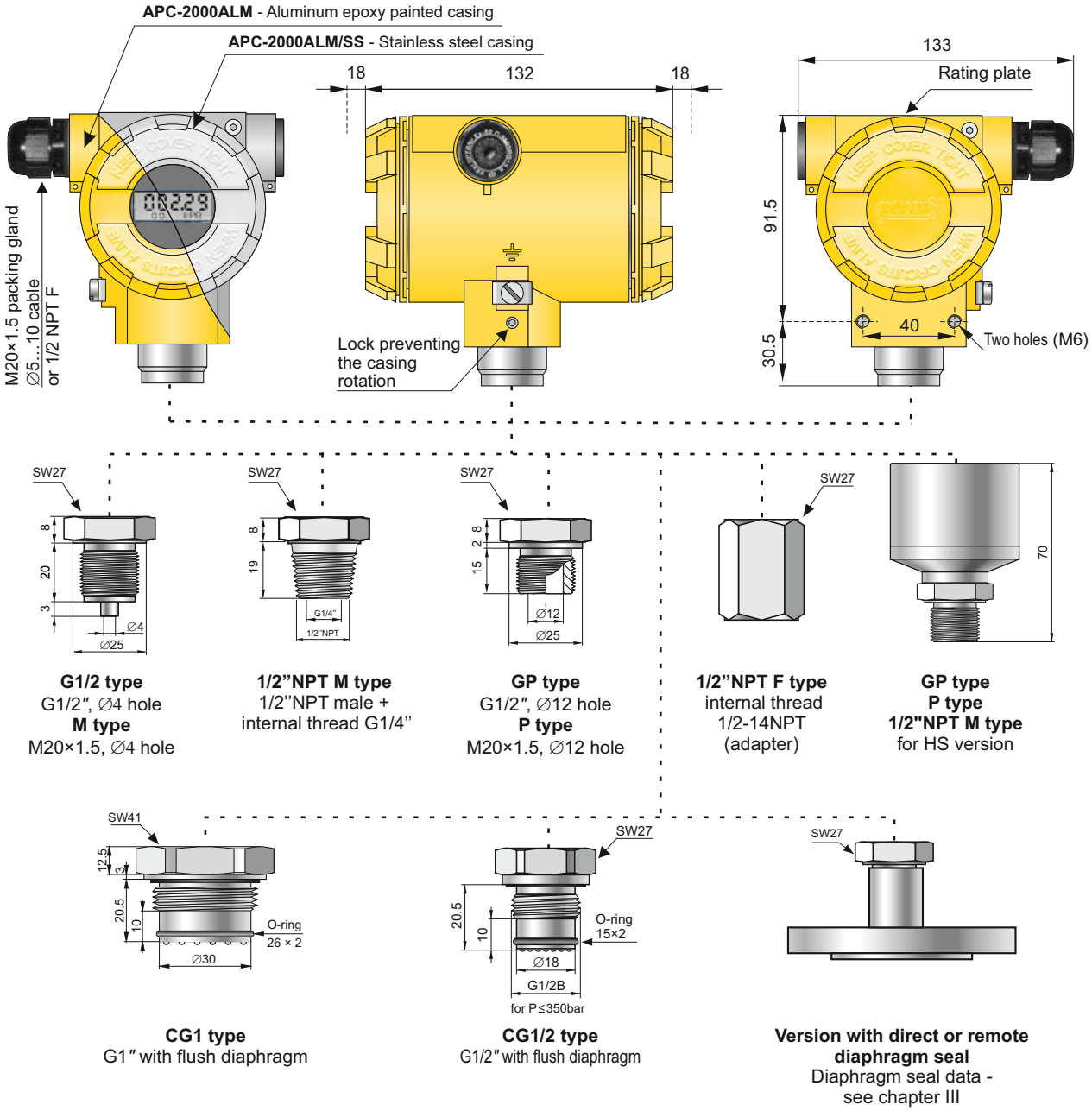

Application

Pressure transmitter APC-2000ALM is designed to measure pressure, vacuum and absolute pressure of gases, vapors and liquids. The measuring element is a piezoresistive silicon sensor separated from the medium by an isolating diaphragm and manometer liquid. The electrical signal from the sensor is converted into a digital value compatible with the Modbus RTU protocol. The housing is made of high-pressure cast aluminum alloy or acid-resistant steel with IP66 protection.
The transmitter is equipped with a configurable liquid crystal display. The housing design allows the display to be rotated 90°, 180° and 270°, the housing can be rotated relative to the sensor in the range of 0 - 340°, and the cable insertion direction can be selected. The display panel includes buttons for scaling the display and selecting the unit of pressure to be measured.

Installation

The transmitter can be mounted directly on the object. To measure the pressure of steam or other hot media, use a siphon or impulse tube. The use of a pressure gauge valve in front of the transducer simplifies installation, and makes it possible to zero or replace the transducer while the facility is in operation. A universal bracket (AL bracket) is provided for mounting the transmitter.

Operation modes of the transmitter

- **Configuration** - is used to set the transmitter's transmission parameters and network address, as well as to reset, calibrate and restore the transmitter's factory settings. The transmitter is operated via a PC using an RS-485/USB converter and Modbus Configurator software.
- **Modbus RTU** - the transmitter operates in a four-wire system with RS485 transmission with Modbus RTU protocol.

Measuring ranges

No.	Measuring range (FSO)		Overpressure limit (without hysteresis)***	
1	0…1000 bar	(0…100 MPa)	1200 bar	(120 MPa)
2	0…600 bar	(0…60 MPa)	1000 bar	(100 MPa)
3	0…300 bar	(0…30 MPa)	450 bar	(45 MPa)
4	0…160 bar	(0…16 MPa)	450 bar	(45 MPa)
5	0...70 bar	(0...7 MPa)	140 bar	(14 MPa)
6	-1...70 bar	(-0,1...7 MPa)	140 bar	(14 MPa)
7	0...25 bar	(0...2,5 MPa)	50 bar	(5 MPa)
8	-1...25 bar	(-0,1...2,5 MPa)	50 bar	(5 MPa)
9	0...7 bar	(0...0,7 MPa)	14 bar	(1,4 MPa)
10	-1…7 bar	(-100…700 kPa)	14 bar	(1,4 MPa)
11	-1…1,5 bar	(-100…150 kPa)	4 bar	(400 kPa)
12	0...2 bar	(0...200 kPa)	4 bar	(400 kPa)
13	0...1 bar	(0...100 kPa)	2 bar	(200 kPa)
14	-0,5...0,5 bar	(-50...50 kPa)	2 bar	(200 kPa)
15	0...0,25 bar	(0...25 kPa)	1 bar	(100 kPa)
16	-100...100 mbar	(-10...10 kPa)	1 bar	(100 kPa)
17	-15...70 mbar	(-1,5...7 kPa)	0,5 bar	(50 kPa)
18	0...1,3 bar abs	(0...130 kPa abs)	2 bar	(200 kPa)
19	0...7 bar abs	(0...0,7 MPa abs)	14 bar	(1,4 MPa)
20	0...25 bar abs	(0...2,5 MPa abs)	50 bar	(5 MPa)
21	0...70 bar abs	(0...7 MPa abs)	140 bar	(14 MPa)
22	0...300 bar abs	(0...30 MPa abs)	450 bar	(45 MPa)

Technical data

Metrological parameters

Accuracy ≤ ±0,075%
≤ ±0,1% for range no. 18

Long-term stability ≤ accuracy for 3 years
or ≤ 2 × accuracy for 5 years

Thermal error < ±0,05% (FSO) / 10°C
(0,1% for ranges no. 16, 17, 18)
max ±0,25% (FSO) in the whole compensation range
(0,4% for ranges no. 16, 17, 18)

Thermal compensation range -25...80°C

Error due to supply voltage change 0,002% (FSO) / V

Materials

Wetted parts and diaphragm
316Lss, Au

*Gold plating is dedicated to measuring the pressure of hydrogen and gaseous media with hydrogen admixture for measurement ranges above 70 bar

Casing Aluminium or 316ss

Ingres protection IP66

Operating conditions

Operating temperature range (ambient temp.) -40…85°C
Exd -40…75°C

Medium temperature range -40...120°C
over 120°C – measurement with use an impulse line or diaphragm seal

CAUTION: the medium must not be allowed to freeze in the impulse line or close to the process connection of the transmitter

Electrical parameters

Power supply 12...30 V DC

Current consumption < 80 mA

Output MODBUS RTU

Resolution 0,0007% of measuring range

Transmission range 1200m

Address space 1…247 devices address

Baud rate 1200, 2400, 4800, 9600, 19200, 28800, 38400, 57600, 115200 bps

Transmission parity check no parity, odd, even

Transmission frame 11 bit (8N2, 8E1, 8O1)
10 bit (8N1)

Response time to inquiry 3...20 ms

Factory settings for transmission parameters:
Baud rate 9600 bps
Parity check even
Address 1

Ordering procedure

Model	Code	Description
APC-2000		Smart pressure transmitter
Versions	/ALM	With display, Modbus output
Certificates, options*	/SS	Stainless steel housing
	/Exd	II 1/2G Ex ia/db IIC T5/T4 Ga/Gb II 2D Ex ia tb IIIC T100°C Db I M2 Ex db ia I Mb (version with SS housing) Ex ia/db IIC T5/T4 Ga/Gb **IECEx** Ex ia tb IIIC T100°C Db Ex db ia I Mb (version with SS housing) Packing gland available on request
* more than one option is available	/Tlen	For oxygen service (sensor filled with non-reactive fluid), only G1/2" connection
	/-40…80°C	Extended thermal compensation range -40 ÷ 80°C
	/IP67	Protection class IP67
	/NACE	NACE MR-01-75 certificate (process connections: M, G1/2", P, GP and 1/2"NPTM)

Measuring range	Range	Min. set range
/0÷1000 bar	0÷1000 bar (0÷100 MPa)	10 bar (1 MPa)
/0÷600 bar	0÷600 bar (0÷60 MPa)	6 bar (600 kPa)
/0÷300 bar	0÷300 bar (0÷30 MPa)	3 bar (300 kPa)
/0÷160 bar	0÷160 bar (0÷16 MPa)	1,6 bar (160 kPa)
/0÷70 bar	0÷70 bar (0÷7 MPa)	0,7 bar (70 kPa)
/-1÷70 bar	-1÷70 bar (-0,1÷7 MPa)	0,71 bar (71 kPa)
/0÷25 bar	0÷25 bar (0÷2,5 MPa)	0,25 bar (25 kPa)
/-1÷25 bar	-1÷25 bar (-0,1÷2,5 MPa)	0,26 bar (26 kPa)
/0÷7 bar	0÷7 bar (0÷700 kPa)	0,07 bar (7 kPa)
/-1÷7 bar	-1÷7 bar (-100÷700 kPa)	0,07 bar (7 kPa)
/-1÷1,5 bar	-1÷1,5 bar (-100÷150 kPa)	120 mbar (12 kPa)
/0÷2 bar	0÷2 bar (0÷200 kPa)	100 mbar (10 kPa)
/0÷1 bar	0÷1 bar (0÷100 kPa)	50 mbar (5 kPa)
/-0,5÷0,5 bar	-0,5÷0,5 bar (-50÷50k Pa)	50 mbar (5 kPa)
/0÷0,25 bar	0÷0,25 bar (0÷25 kPa)	25 mbar (2,5 kPa)
/-100÷100 mbar	-100÷100 mbar (-10÷10 kPa)	20 mbar (2 kPa)
/-15÷70 mbar	-15÷70 mbar (-1,5÷7 kPa)	5 mbar (0,5 kPa)
/0÷1,3 bar ABS	0÷1,3 bar ABS (0÷130 kPa ABS)	0,1 bar ABS (10 kPa ABS)
/0÷7 bar ABS	0÷7 bar ABS (0÷700 kPa ABS)	0,1 bar ABS (10 kPa ABS)
/0÷25 bar ABS	0÷25 bar ABS (0÷2,5 MPa ABS)	0,25 bar ABS (25 kPa ABS)
/0÷70 bar ABS	0÷70 bar ABS (0÷7 MPa ABS)	0,7 bar ABS (70 kPa ABS)
/0÷300 bar ABS	0÷300 bar ABS (0÷30 MPa ABS)	0,3 bar ABS (30 kPa ABS)

Process connections		
	/M	Thread M20x1,5 (male) with ∅4 hole, wetted parts SS316L
	/G1/2	Thread G1/2" (male) with ∅4 hole, wetted parts SS316L
	/G1/2(Au)	Thread G1/2" (male) with ∅4 hole, gold plated diaphragm (range no. 1, 2, 3, 4, 5)
	/P	Thread M20x1,5 (male) with ∅12 hole, wetted parts SS316L
	/GP	Thread G1/2" (male) with ∅12 hole, wetted parts SS316L
	/GP(Hastelloy)	Thread G1/2" (male) with ∅12 hole, wetted parts Hastelloy C 276 Not available with range no. 1, 2
	/CG1"	Thread G1" with flush diaphragm, wetted parts SS316L (Pressure limits: min. 0,1bar / max. 70bar)(Max medium temperature continuous/instantaneous 100/130°C)
	/CG1"(Hastelloy)	Thread G1" with flush diaphragm, wetted parts Hastelloy C 276 (Pressure limits: min. 0,1bar / max. 70bar)
	/CG1/2"	Thread G1/2" with flush diaphragm, wetted parts SS316L (Pressure limits: min. 2,5bar)(Max medium temperature continuous/instantaneous 100/130°C)
	/1/2"NPTM	Thread 1/2"NPT Male, G1/4" Female, wetted parts SS316L (Pressure limits: 1/2"NPT Male max. 690bar, G1/4" Female max. 1000bar)
	/1/2"NPTM(Hastelloy)	Thread 1/2"NPT Male, G1/4" Female, wetted parts Hastelloy C 276 (Only nominal range 0…300bar)
	/1/2"NPTF	Thread G1/2" or M20x1,5 with adapter to 1/2"NPT Female, wetted parts SS316L (Pressure limits: max. 690bar)
	/code of diaphragm seal	Diaphragm seal (see chapter of diaphragm seals)

Electrical connection		
	(without marking)	Packing gland M20x1,5
	/US	Thread 1/2"NPT Female

Accessories		
	/AL	Mounting bracket type AL for 2" pipe, material zinced steel
	/AL(SS)	Mounting bracket type AL for 2" pipe, material ss304
	/AL(SS316)	Mounting bracket type AL for 2" pipe, material ss316
	/ST	Stainless Steel plate fixed to the housing
	/MT	Stainless Steel Tag plate mounted on wire
	/PT	TAG sticker on transmitter's body