GREYSTONE
ENERGY SYSTEMS INC

MISCELLANEOUS CONTROL DEVICES

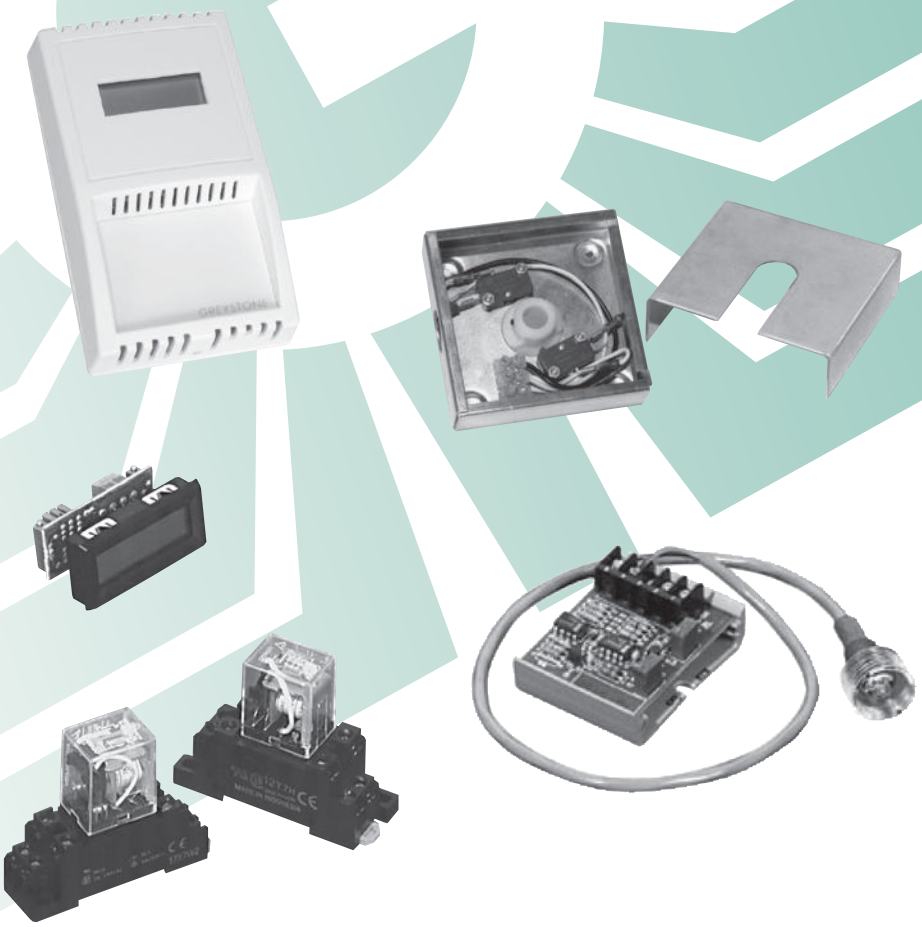

PRODUCTS:

- Light sensor/transducer - PSR series
- Loop powered indicator - Executive Enclosure
- Loop powered indicator - LPI series
- Damper end switch - DES-100 series
- General purpose relays - LY & MY & MK series

Peace of mind through reliable control devices

GREYSTONE HAS AN **ISO 9001** REGISTERED QUALITY SYSTEM

LIGHT SENSOR - PSR SERIES

DESCRIPTION:

The PSR-1 is a Light Sensitive Resistor that may be used as an input to indicate the presence of light at the sensor location. The PSR-1-T is a PSR-1 coupled with a B420-P transmitter. The PSR-1-T produces a 4 - 20mA output signal. The sensor is designed to be mounted in the end of a weatherproof conduit box.

APPLICATION:

The PSR-1 has a resistance in darkness in excess of 1 MΩ and resistance in bright light of less than 1.5 kΩ.

The PSR-1 and PSR-1-T indicate the presence or absence of light. They should not be used for foot-candle control of occupied spaces. The PSR-1-T is calibrated for 4mA in bright light > 100 foot-candles and 20mA in darkness < 0.1 foot-candles.

SPECIFICATIONS:

PSR-1

Output (non-linear)	>1 MΩ in dark <1.5 kΩ in bright light
Temperature	-25˚C to 75˚C (-13˚F to 167˚F)

PSR-1-T

Power	12 - 35 VDC
Max current draw	22mA
Output (linear)	4 - 20mA (current limited to 22mA)
Temperature	-25˚C to 75˚C (-13˚F to 167˚F)

PSR: PRODUCT ORDERING INFORMATION

MODEL	PRODUCT DESCRIPTION
PSR	RESISTIVE LIGHT SENSOR

CODE	OPTIONS
1	Sensor only
T	4 - 20mA Transmitter
E	Weatherproof Enclosure

EXAMPLE:

Light sensor c/w 4 - 20mA output in weatherproof enclosure

PSR-1-T-E

LOOP POWERED INDICATOR-EXECUTIVE ENCLOSURE SERIES

DESCRIPTION:

The AE-LPI-X is a loop powered indicator in an executive space enclosure. The indicator is factory calibrated for a specific temperature range or 0-100% RH.

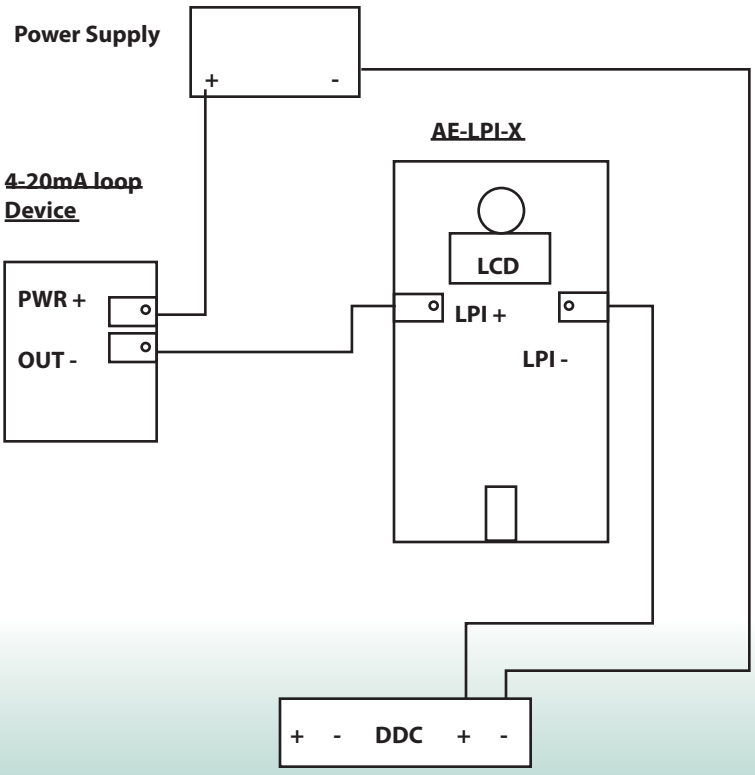

SPECIFICATIONS:

Power Supply	12 to 30 Vdc loop powered
Display Units	C or F (Factory set)
Display Range	As per order
Display Resolution	0.1 C or 0.1 F for display of 00.0 to 99.9
Display Size	24 mm W x 11 mm H (0.95" x 0.45") three digit
PCB Operating Temperature	0 to 70 C (32 to 158 F)
PCB Operating Humidity	0 to 95% RH (non-condensing)
Wiring Connections	Two wires,screw terminal block, (14 to 22 AWG)
Manufacturing Process	ISO 9001 Certified
Internal Adjustments	Clearly marked ZERO and SPAN pots

ORDERING:

AE-LPI-X

X– Suffix Equals

1-	0-35 C
2-	0-50 C
3-	0-100 C
7F-	0-50 F
7K-	0-100 F
RH-	0 to 100% RH

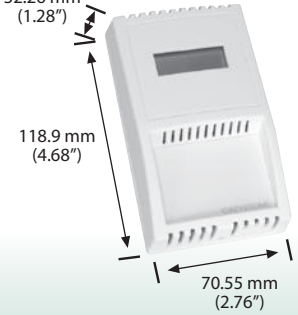

DAMPER END SWITCH - DES-100 SERIES

DESCRIPTION:

The damper position switch is a mechanically activated electrical switch which provides accurate and reliable indication of damper blade position. Unlike standard limit switches which only indicate damper drive linkage position, the position switch is mounted directly on the main damper drive axle or on an auxiliary axle off of an indirectly driven blade. This assures true damper blade position indication.

ORDERING:

DES-100 - Provides two output signals to indicate a fully open and fully closed position.

DES-101 - Provides two output signals that act as a double pole switch.

DESIGN FEATURES:

- Adjustable axle mounted collar provides for easy set-up and adjustment minimizing labour costs.
- Electrical enclosure has a 1/2" knockout which allows for quick and easy installation.
- Dual, opposed switches in the same enclosure provide for indication of fully open or closed.
- Switches can be set by user as NC or NO (form A or B)
- Fits 1/2" shaft only

SWITCH RATINGS:

- 4A at 125 VAC

LOOP POWERED INDICATOR LPI-1 - 4-20mA

DESCRIPTION:

LPI-1 loop powered indicators with large 3-1/2 digit LCD are designed to display any 4 to 20mA signal directly in the engineering units of the measured media. The display is powered directly by the measured 4 to 20mA signal so there is no need for a power supply.

SPECIFICATIONS:

Supply voltage	• Powered by milliamp control loop
Input	• 4 - 20mA dc
Impedance	• 300 ohms nominal
Accuracy	• ±0.1% of scale
Adjustments	• SPAN (GAIN) and ZERO (OFFSET)
Decimal point	• 3 positions or none (user selectable)
Range	• -1999 to +1999
Operating temp.	• 0˚C to 50˚C (32˚F to 122˚F)
Humidity	• 95% Non-condensing
Connection	• 2 pin screw terminal
Cutout required	• 25.1 mm (0.988") x 55.5 mm (2.19")
Panel clearance	• 40 mm (1.6")
Display	• 3-1/2 digit
Digits size	• 11.43 mm (0.45") LCD
Dimensions	• 35.5 mm (1.4") H x 58.67 mm (2.31") W

APPLICATIONS:

- Temperature indication
- Pressure indication
- Kilowatt demand
- Voltage indication
- Humidity indication
- Differential or static pressure
- Gallons per minute flow
- Current indication
- Other 4 - 20mA indications

FEATURES:

- Snap in panel mounting
- Large easy to read LCD display
- Optional NEMA 4X enclosure
- Pre-calibrated for desired range (optional)
- Optional selector switch for multiple indicators on one display unit

NOTE:

Impedance is rated at 24 VDC and 20mA. Exercise caution to avoid too much impedance in the current loop. Most transmitters are rated 500 to 750 ohms.

GENERAL PURPOSE RELAYS

PRODUCT ORDERING INFORMATION:

SERIES	DESCRIPTION
LY2N	10 amp contacts, DPDT w/ Neon Light

CODE	COIL VOLTAGE
12 VDC	Low voltage DC, 12 VDC
24 VDC	Low voltage DC, 24 VDC
24 VAC	Low Voltage AC, 24 VAC
120 VAC	High voltage AC, 120 VAC

LY2N 24 VDC

Greystone Energy Systems, Inc. reserves the right to make design modifications without prior notice.

EXAMPLE:

For a 10 amp relay c/w DPDT contacts, LED and 24 VDC supply.

NOTE:

For other relay types, detailed specifications, or for more options to above relays, please contact Greystone.

RELAY BASES (required for above):

PTF08A-E • Base for LY2

GREYSTONE
ENERGY SYSTEMS INC

Greystone Energy Systems Inc.
150 English Drive, Moncton, NB
Canada E1E 4G7

(506) 853-3057 Fax: (506) 853-6014
North America: 1-800-561-5611
e-mail: mail@greystoneenergy.com
www.greystoneenergy.com

Greystone Energy Systems Inc. is one of North America's largest ISO registered manufacturers of HVAC sensors and transducers for Building Automation Management Systems. We have conscientiously established a worldwide reputation as an industry leader by maintaining leading-edge design technology, prompt technical support, and a commitment to on-time deliveries. We take pride in our Quality Management System which is ISO 9001 certified, assuring our customers of consistent product reliability.

GREYSTONE HAS AN **ISO 9001** REGISTERED QUALITY SYSTEM

03/13
MISC-SPE-001
Copyright © Greystone Energy Systems Inc. All Rights Reserved
PRINTED IN CANADA